Structured Electronic Design

Design of Multi-loop Negative Feedback Amplifier Configurations

Anton J.M. Montagne

(c) 2021 A.J.M. Montagne

Multiple-loop feedback configurations

1. Each transmission parameter can be fixed to a nonzero value with a single feedback loop

2. Multiple transmission parameters can be fixed with multiple loops, hence all 15 amplifier types can be realized with negative feedback

3. Transmission parameters can be fixed independently if:

   a. Current through voltage sensing elements equals zero

   b. Voltage across current sensing elements equals zero

   c. Output impedance of feedback network is ideal

      - Zero in case of voltage comparison

      - Infinite in case of current comparison

(c) 2021 A.J.M. Montagne

Quadruple-loop feedback configuration

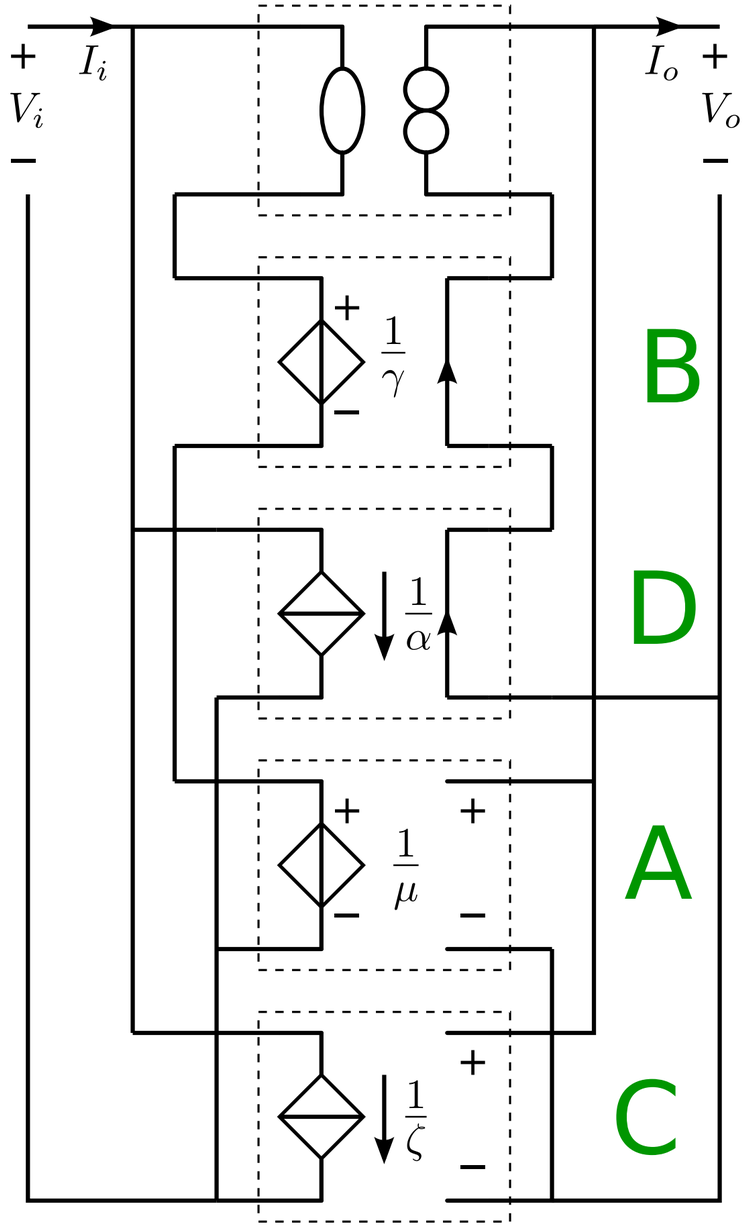

Multiple-loop not in BSc course

(c) 2021 A.J.M. Montagne