Structured Electronic Design

Design of Single-loop Negative Feedback Amplifier Configurations

Anton J.M. Montagne

Negative Feedback Amplifier Configurations

Negative Feedback Amplifier Configurations

Source type	Load type	Amplifier type	A, B, C, D	Feedback configuration

Negative Feedback Amplifier Configurations

Source type	Load type	Amplifier type	A, B, C, D	Feedback configuration
V				

Negative Feedback Amplifier Configurations

Source type	Load type	Amplifier type	A, B, C, D	Feedback configuration
V	V			

Negative Feedback Amplifier Configurations

Source type	Load type	Amplifier type	A, B, C, D	Feedback configuration
V	V	Voltage amplifier		

Negative Feedback Amplifier Configurations

Source type	Load type	Amplifier type	A, B, C, D	Feedback configuration
V	V	Voltage amplifier	A, 0, 0, 0	

Negative Feedback Amplifier Configurations

Source type	Load type	Amplifier type	A, B, C, D	Feedback configuration
V	V	Voltage amplifier	A, 0, 0, 0	Output voltage sensing / parallel feedback

Negative Feedback Amplifier Configurations

Source type	Load type	Amplifier type	A, B, C, D	Feedback configuration
V	V	Voltage amplifier	A, 0, 0, 0	Output voltage sensing / parallel feedback
				Input voltage comparison / series feedback

Negative Feedback Voltage Amplifier Configurations

Negative Feedback Voltage Amplifier Configurations

Nonenergic feedback amplifier

Negative Feedback Voltage Amplifier Configurations

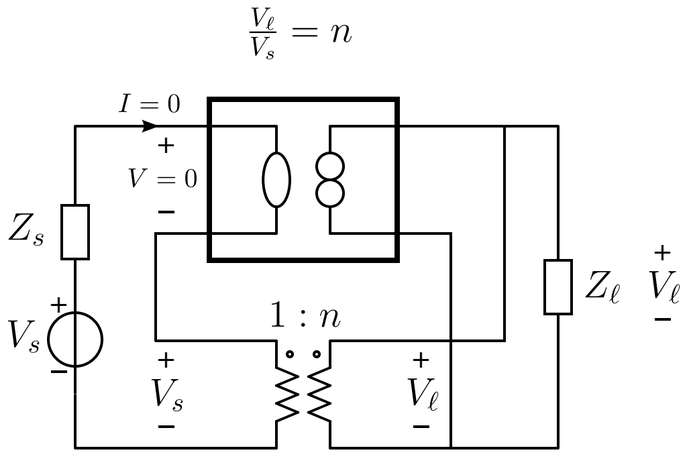

Nonenergic feedback amplifier

Negative Feedback Voltage Amplifier Configurations

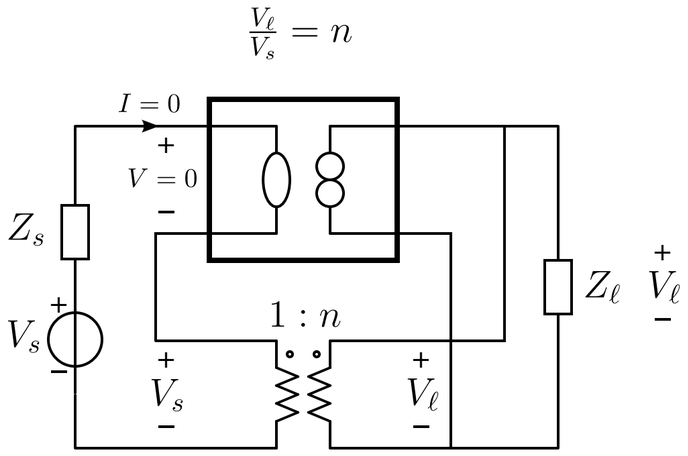

Nonenergic feedback amplifier

- port isolation

Negative Feedback Voltage Amplifier Configurations

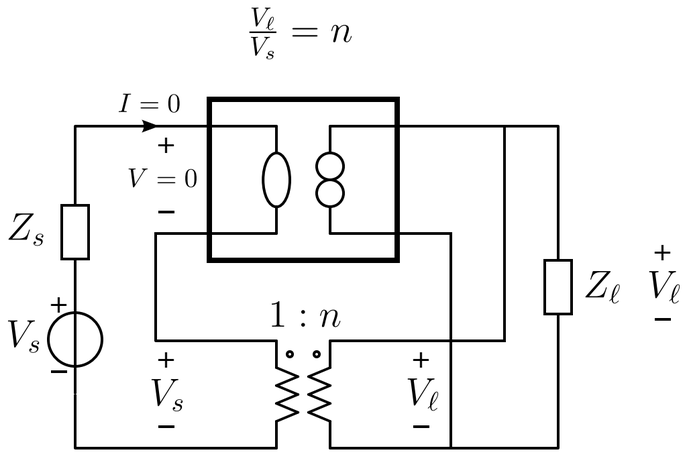

Nonenergic feedback amplifier

- port isolation
- inverting or noninverting

Negative Feedback Voltage Amplifier Configurations

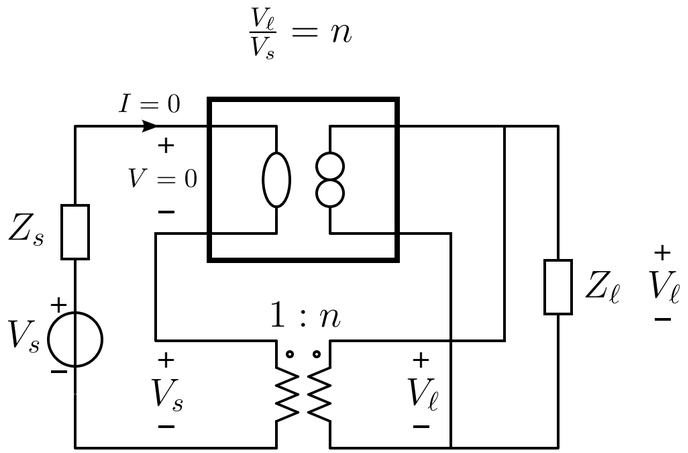

Nonenergic feedback amplifier

- port isolation
- inverting or noninverting
- gain less, equal or larger than unity

Negative Feedback Voltage Amplifier Configurations

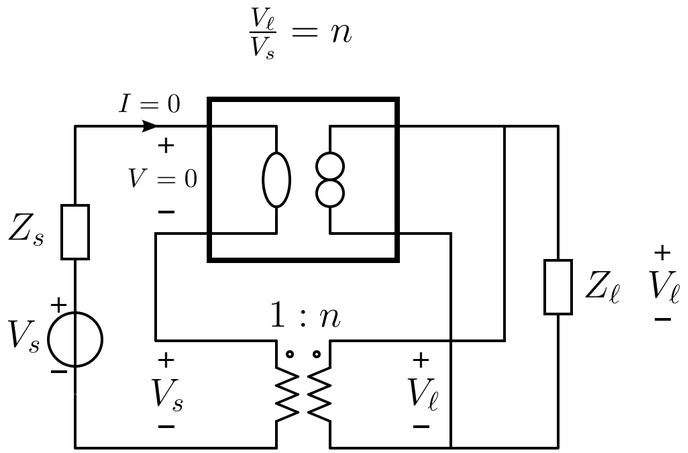

Nonenergic feedback amplifier

- port isolation
- inverting or noninverting
- gain less, equal or larger than unity

Nonenergic feedback follower

Negative Feedback Voltage Amplifier Configurations

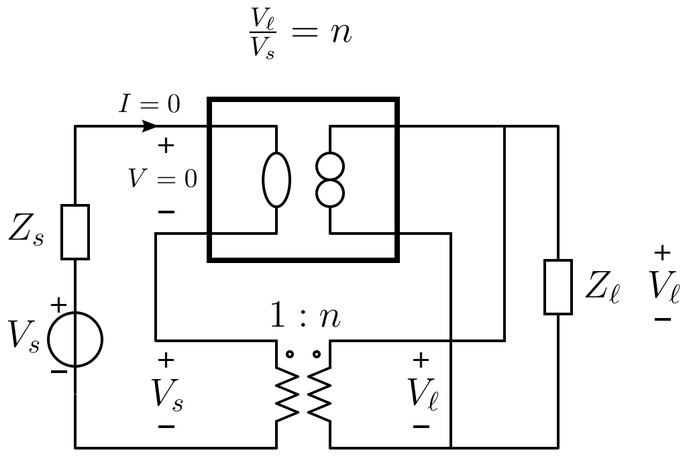

Nonenergic feedback amplifier

- port isolation
- inverting or noninverting
- gain less, equal or larger than unity

Nonenergic feedback follower

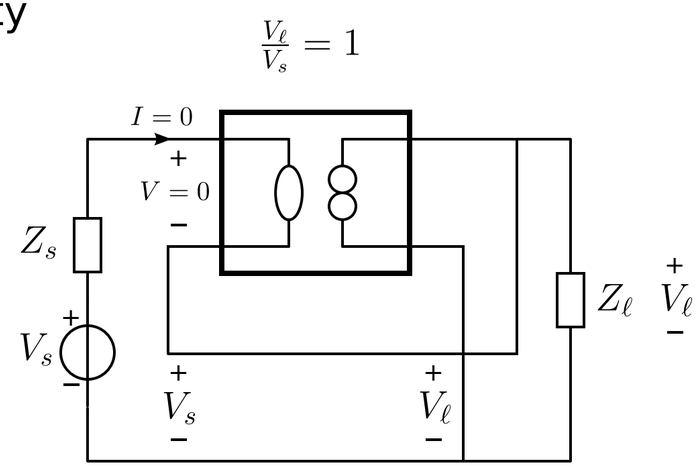

Negative Feedback Voltage Amplifier Configurations

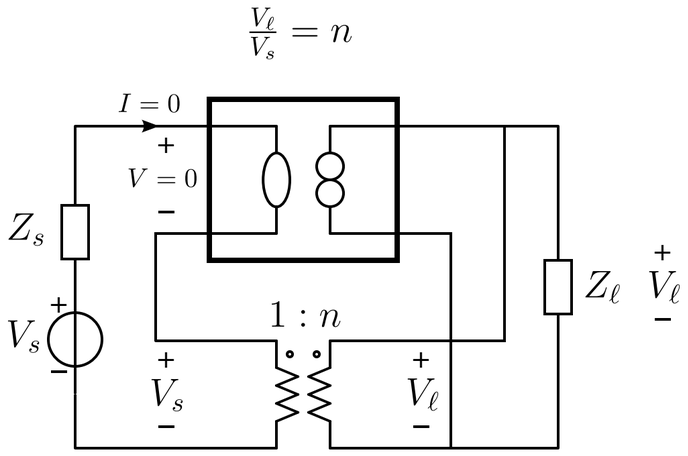

Nonenergic feedback amplifier

- port isolation
- inverting or noninverting
- gain less, equal or larger than unity

Nonenergic feedback follower

- no port isolation

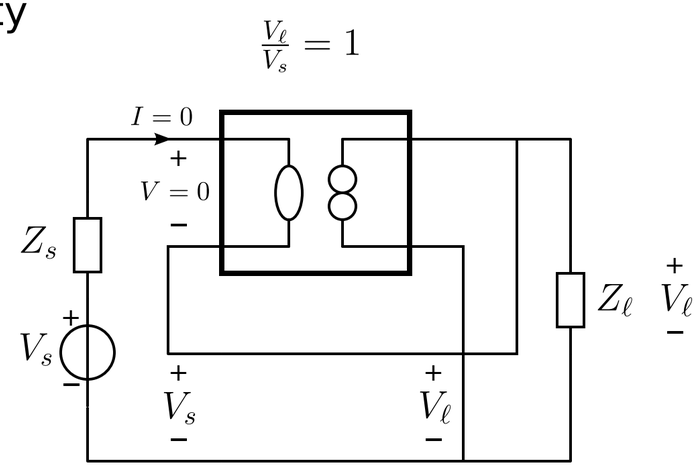

Negative Feedback Voltage Amplifier Configurations

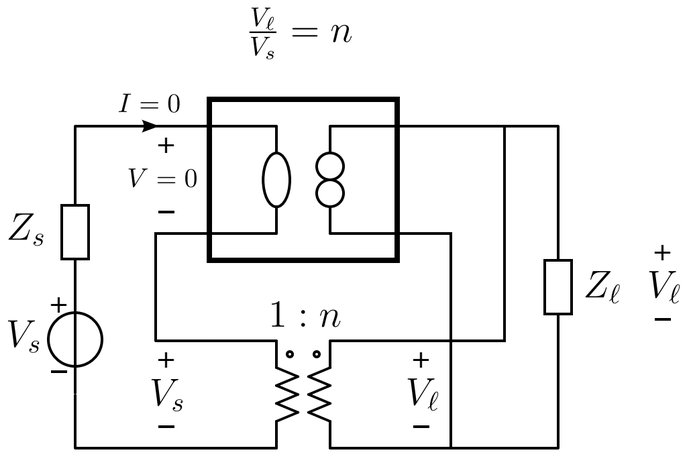

Nonenergic feedback amplifier

- port isolation
- inverting or noninverting
- gain less, equal or larger than unity

Nonenergic feedback follower

- no port isolation
- noninverting

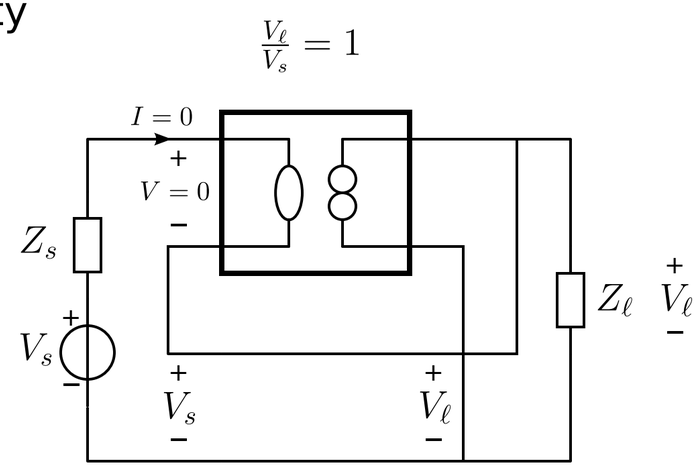

Negative Feedback Voltage Amplifier Configurations

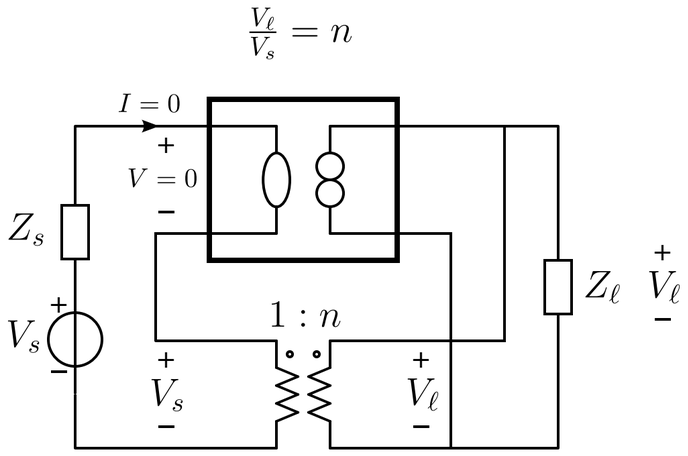

Nonenergic feedback amplifier

- port isolation
- inverting or noninverting
- gain less, equal or larger than unity

Nonenergic feedback follower

- no port isolation
- noninverting
- gain equals unity

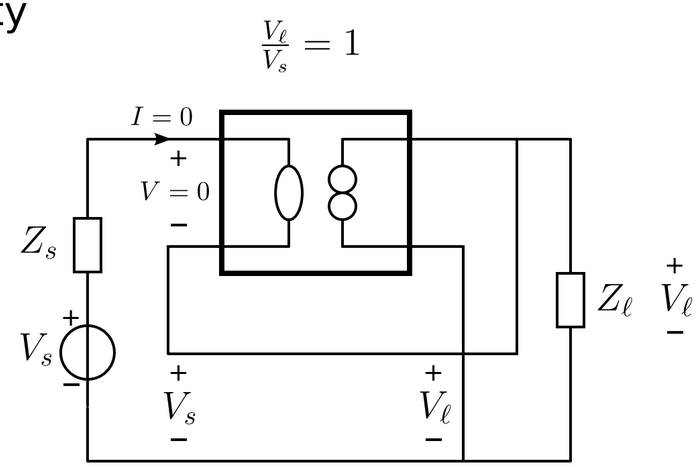

Negative Feedback Voltage Amplifier Configurations

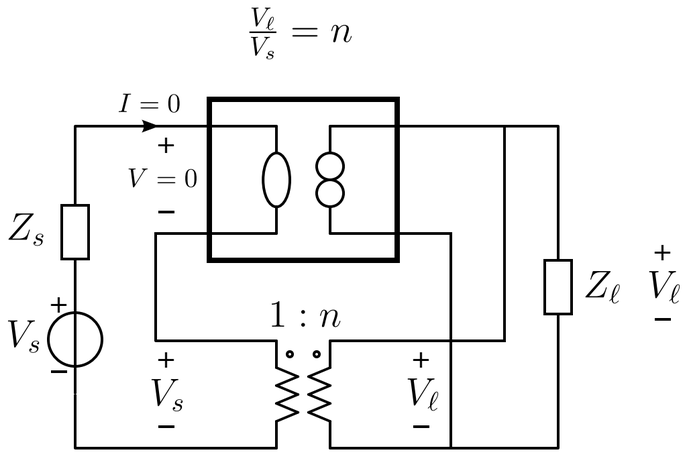

Nonenergic feedback amplifier

- port isolation
- inverting or noninverting
- gain less, equal or larger than unity

Nonenergic feedback follower

- no port isolation
- noninverting
- gain equals unity

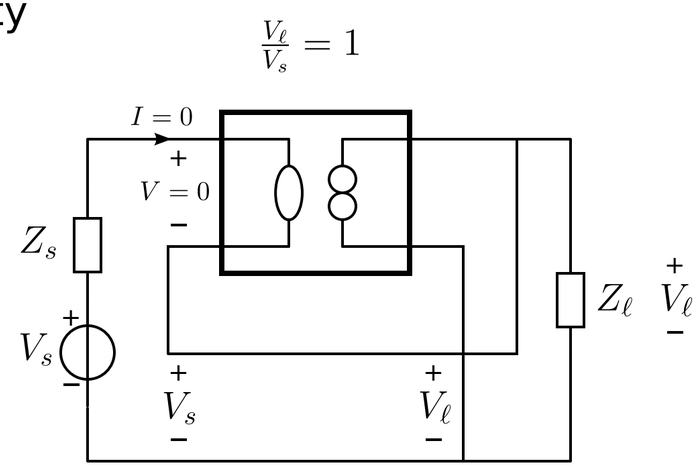

Passive feedback amplifier

Negative Feedback Voltage Amplifier Configurations

$\frac{V_\ell}{V_s} = n$

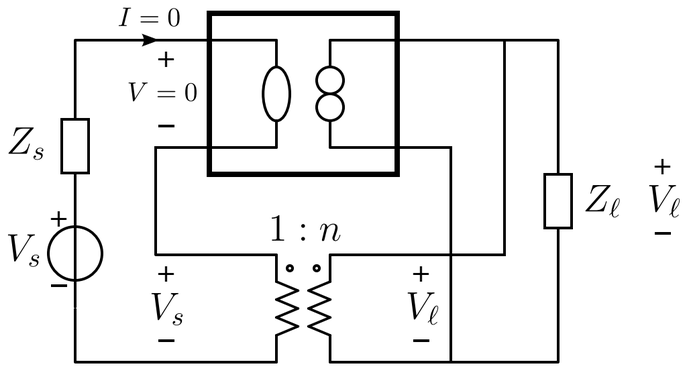

Nonenergic feedback amplifier

- port isolation
- inverting or noninverting
- gain less, equal or larger than unity

$\frac{V_\ell}{V_s} = 1$

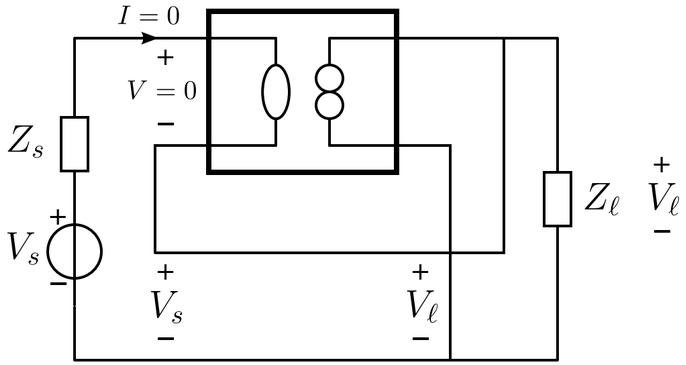

Nonenergic feedback follower

- no port isolation
- noninverting
- gain equals unity

$\frac{V_\ell}{V_s} = \frac{Z_1+Z_2}{Z_2}$

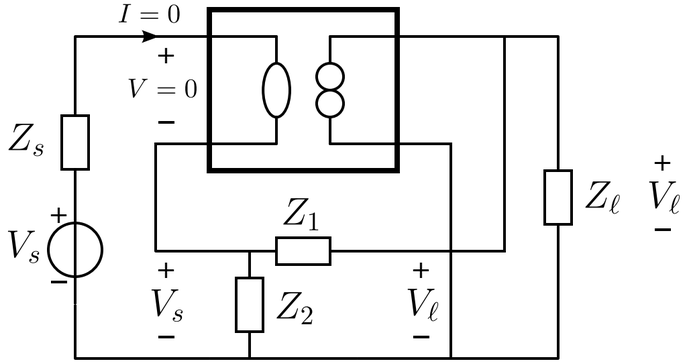

Passive feedback amplifier

Negative Feedback Voltage Amplifier Configurations

$\frac{V_\ell}{V_s} = n$

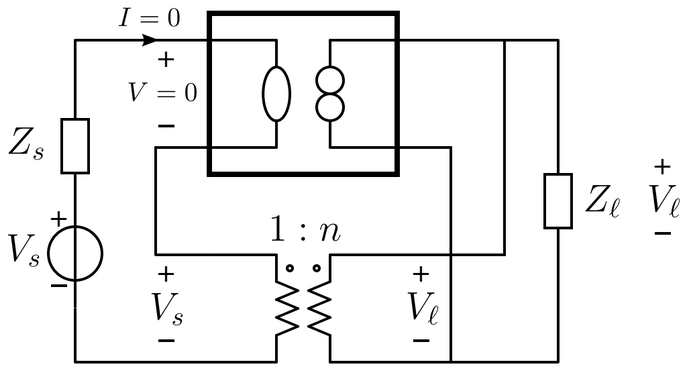

Nonenergic feedback amplifier

- port isolation
- inverting or noninverting
- gain less, equal or larger than unity

$\frac{V_\ell}{V_s} = 1$

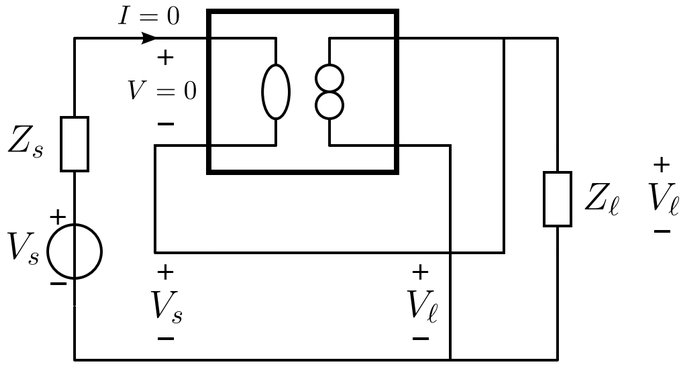

Nonenergic feedback follower

- no port isolation
- noninverting
- gain equals unity

$\frac{V_\ell}{V_s} = \frac{Z_1+Z_2}{Z_2}$

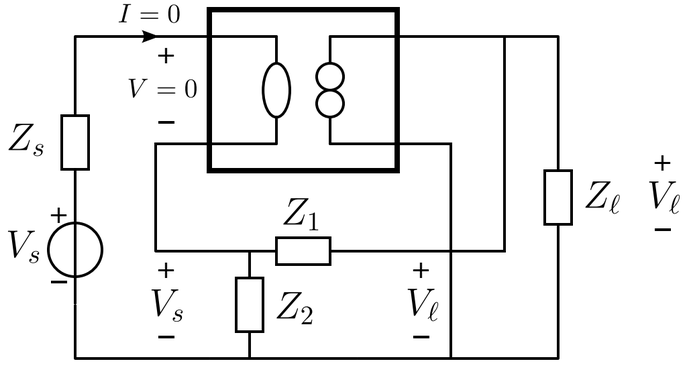

Passive feedback amplifier

- no port isolation

Negative Feedback Voltage Amplifier Configurations

$\frac{V_\ell}{V_s} = n$

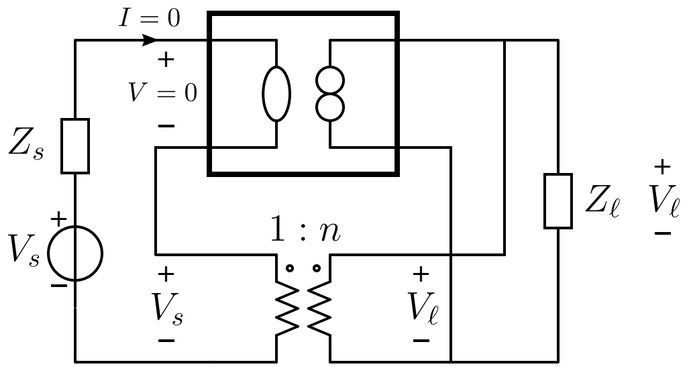

Nonenergic feedback amplifier

- port isolation
- inverting or noninverting
- gain less, equal or larger than unity

$\frac{V_\ell}{V_s} = 1$

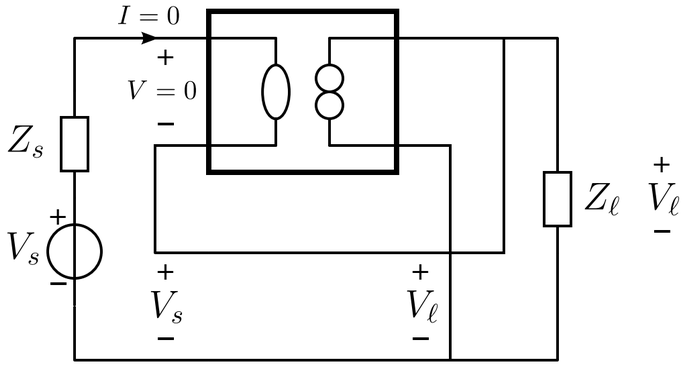

Nonenergic feedback follower

- no port isolation
- noninverting
- gain equals unity

$\frac{V_\ell}{V_s} = \frac{Z_1+Z_2}{Z_2}$

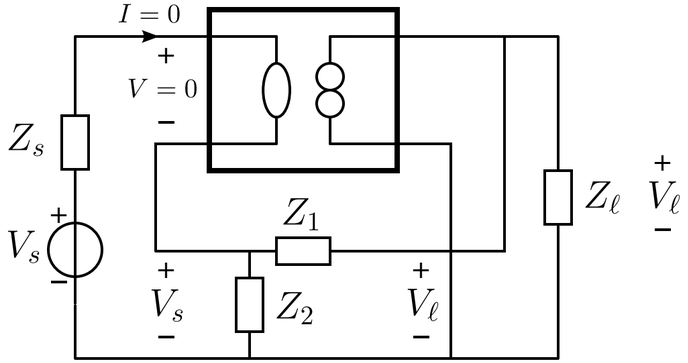

Passive feedback amplifier

- no port isolation
- noninverting

Negative Feedback Voltage Amplifier Configurations

$\frac{V_\ell}{V_s} = n$

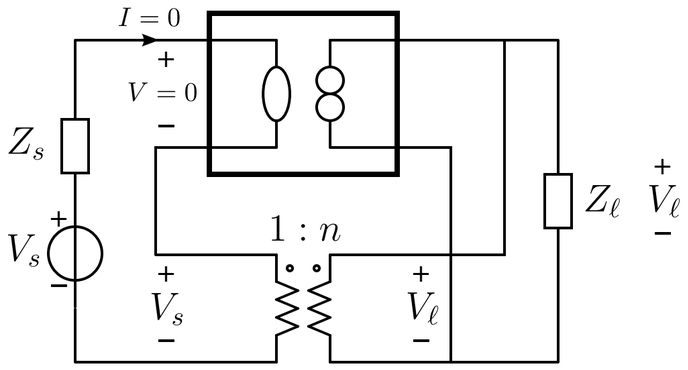

Nonenergic feedback amplifier

- port isolation
- inverting or noninverting
- gain less, equal or larger than unity

$\frac{V_\ell}{V_s} = 1$

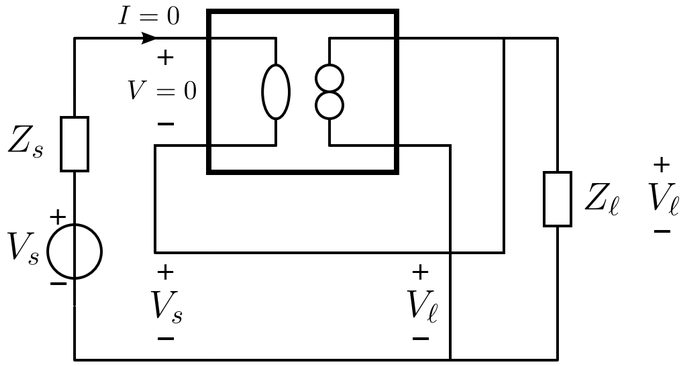

Nonenergic feedback follower

- no port isolation
- noninverting
- gain equals unity

$\frac{V_\ell}{V_s} = \frac{Z_1+Z_2}{Z_2}$

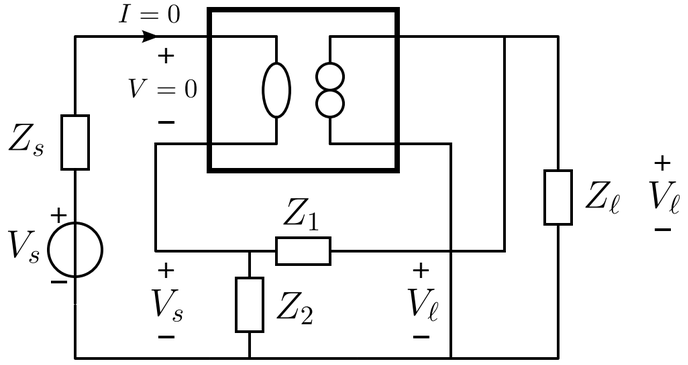

Passive feedback amplifier

- no port isolation
- noninverting
- gain larger than unity

Negative Feedback Voltage Amplifier Configurations

$\frac{V_\ell}{V_s} = n$

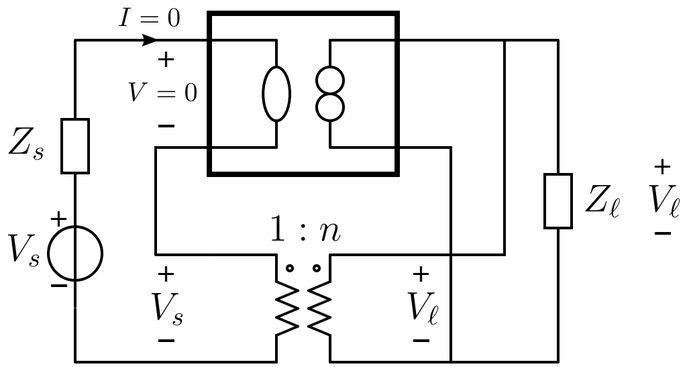

Nonenergic feedback amplifier

- port isolation
- inverting or noninverting
- gain less, equal or larger than unity

$\frac{V_\ell}{V_s} = 1$

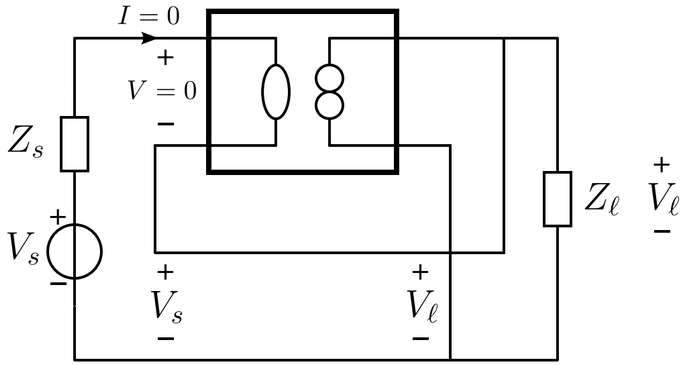

Nonenergic feedback follower

- no port isolation
- noninverting
- gain equals unity

$\frac{V_\ell}{V_s} = \frac{Z_1+Z_2}{Z_2}$

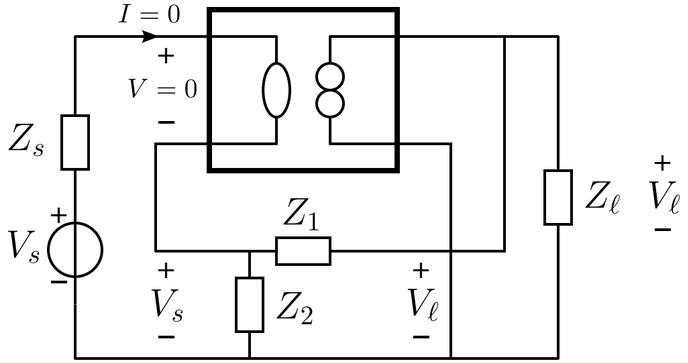

Passive feedback amplifier

- no port isolation
- noninverting
- gain larger than unity

Negative Feedback Amplifier Configurations

Source type	Load type	Amplifier type	A, B, C, D	Feedback configuration
V	V	Voltage amplifier	A, 0, 0, 0	Output voltage sensing / parallel feedback Input voltage comparison / series feedback
V				

Negative Feedback Amplifier Configurations

Source type	Load type	Amplifier type	A, B, C, D	Feedback configuration
V	V	Voltage amplifier	A, 0, 0, 0	Output voltage sensing / parallel feedback Input voltage comparison / series feedback
V	I			

Negative Feedback Amplifier Configurations

Source type	Load type	Amplifier type	A, B, C, D	Feedback configuration
V	V	Voltage amplifier	A, 0, 0, 0	Output voltage sensing / parallel feedback Input voltage comparison / series feedback
V	I	Transadmittance		

Negative Feedback Amplifier Configurations

Source type	Load type	Amplifier type	A, B, C, D	Feedback configuration
V	V	Voltage amplifier	A, 0, 0, 0	Output voltage sensing / parallel feedback Input voltage comparison / series feedback
V	I	Transadmittance	0, B, 0, 0	

Negative Feedback Amplifier Configurations

Source type	Load type	Amplifier type	A, B, C, D	Feedback configuration
V	V	Voltage amplifier	A, 0, 0, 0	Output voltage sensing / parallel feedback Input voltage comparison / series feedback
V	I	Transadmittance	0, B, 0, 0	Output current sensing / series feedback

Negative Feedback Amplifier Configurations

Source type	Load type	Amplifier type	A, B, C, D	Feedback configuration
V	V	Voltage amplifier	A, 0, 0, 0	Output voltage sensing / parallel feedback Input voltage comparison / series feedback
V	I	Transadmittance	0, B, 0, 0	Output current sensing / series feedback Input voltage comparison / series feedback

Negative Feedback Transadmittance Configurations

Negative Feedback Transadmittance Configurations

Nonenergic feedback amplifier

Negative Feedback Transadmittance Configurations

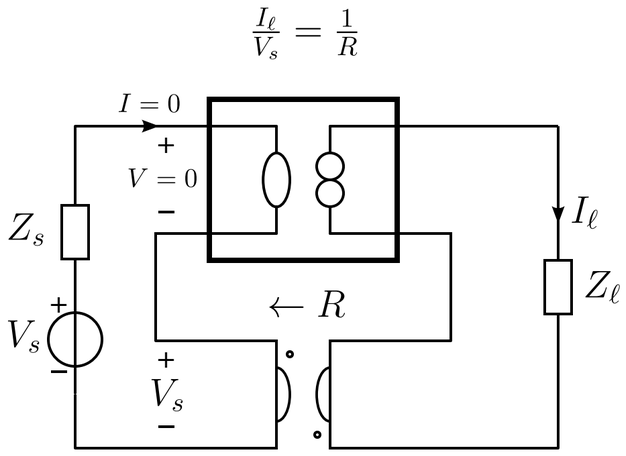

Nonenergic feedback amplifier

Negative Feedback Transadmittance Configurations

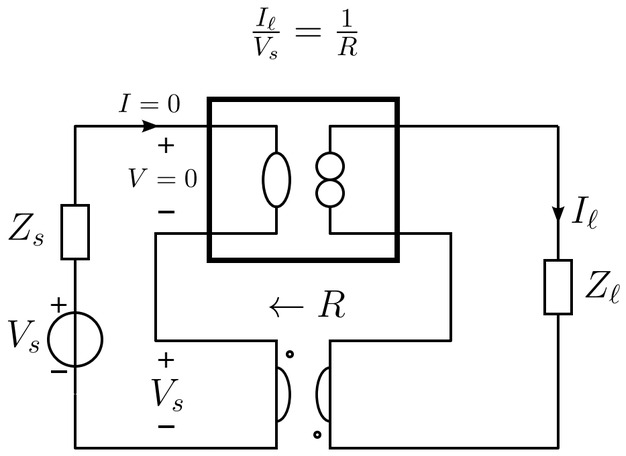

Nonenergic feedback amplifier

- port isolation

Negative Feedback Transadmittance Configurations

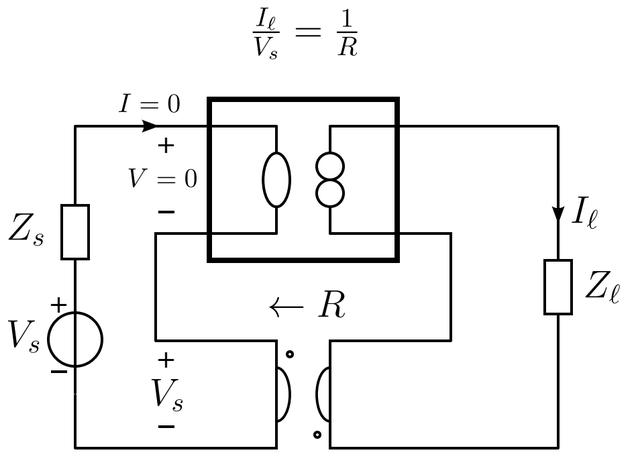

Nonenergic feedback amplifier

- port isolation
- inverting or noninverting

Negative Feedback Transadmittance Configurations

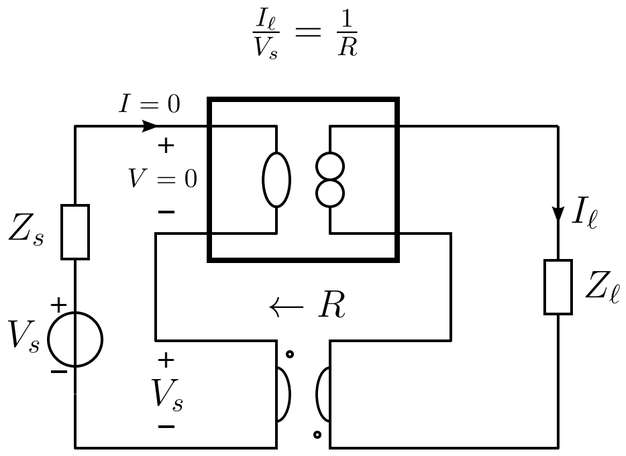

Nonenergic feedback amplifier

- port isolation
- inverting or noninverting

Passive feedback amplifier

Negative Feedback Transadmittance Configurations

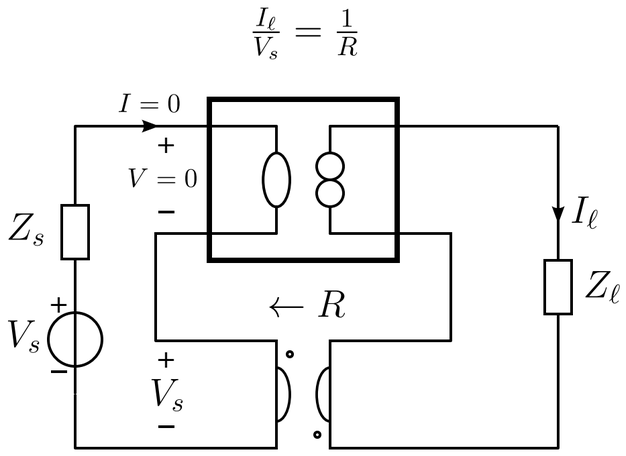

Nonenergic feedback amplifier

- port isolation
- inverting or noninverting

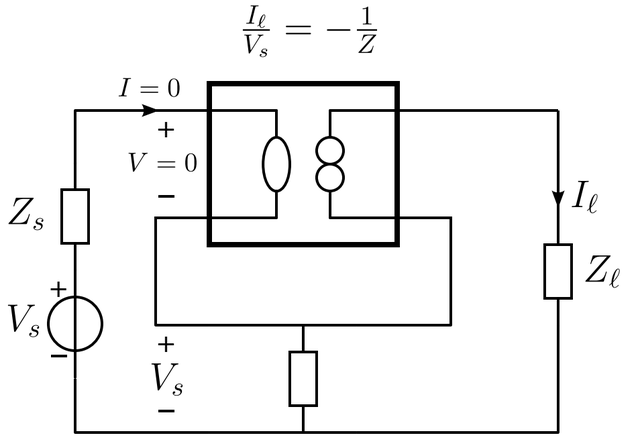

Passive feedback amplifier

Negative Feedback Transadmittance Configurations

$$\frac{I_\ell}{V_s} = \frac{1}{R}$$

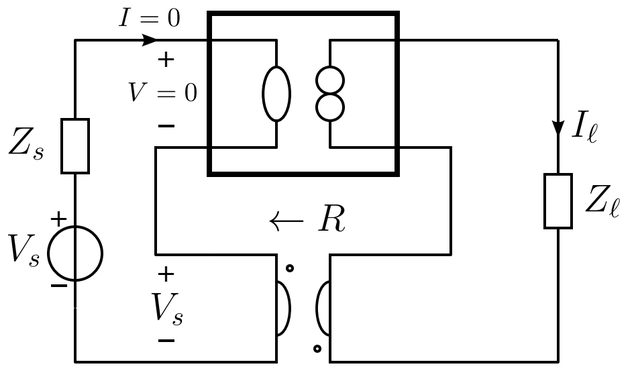

Nonenergic feedback amplifier

- port isolation
- inverting or noninverting

$$\frac{I_\ell}{V_s} = -\frac{1}{Z}$$

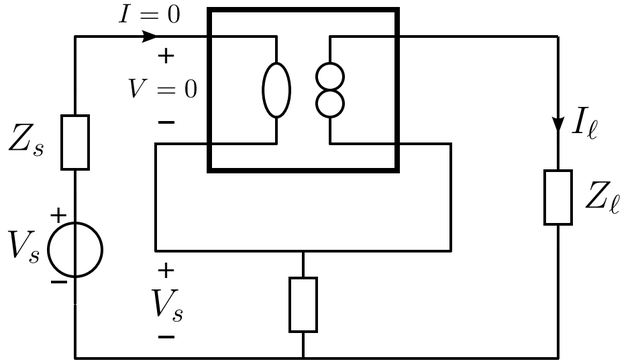

Passive feedback amplifier

- no port isolation

Negative Feedback Transadmittance Configurations

$$\frac{I_\ell}{V_s} = \frac{1}{R}$$

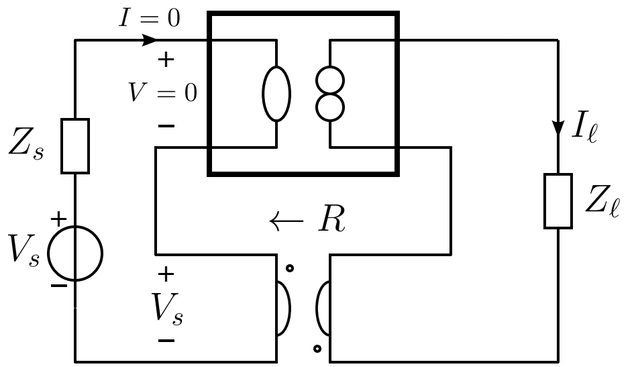

Nonenergic feedback amplifier

- port isolation
- inverting or noninverting

$$\frac{I_\ell}{V_s} = -\frac{1}{Z}$$

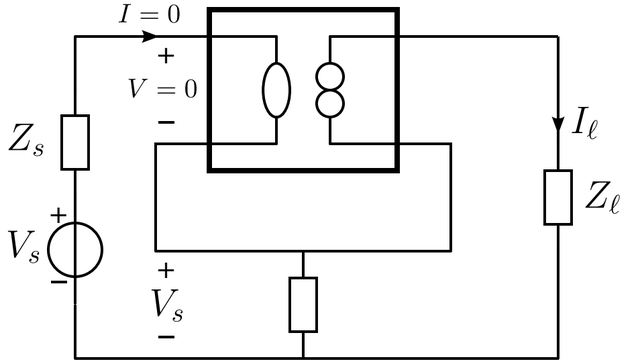

Passive feedback amplifier

- no port isolation
- inverting

Negative Feedback Transadmittance Configurations

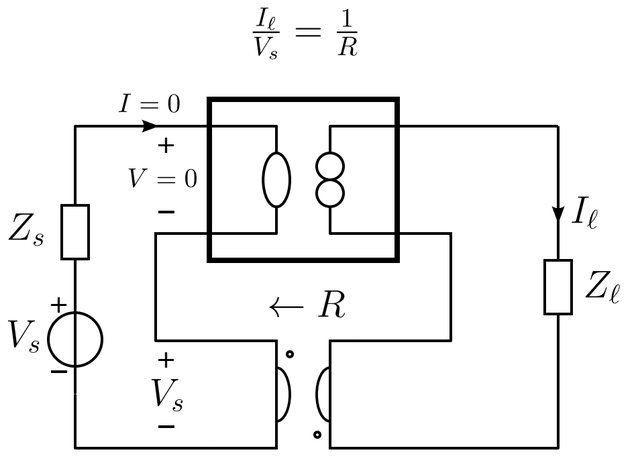

Nonenergic feedback amplifier

- port isolation
- inverting or noninverting

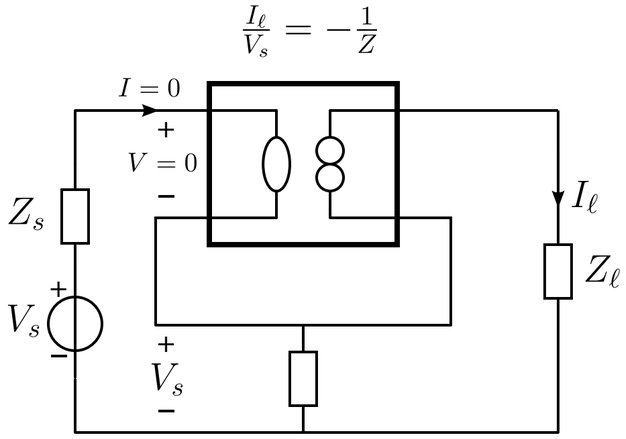

Passive feedback amplifier

- no port isolation
- inverting

Negative Feedback Amplifier Configurations

Source type	Load type	Amplifier type	A, B, C, D	Feedback configuration
V	V	Voltage amplifier	A, 0, 0, 0	Output voltage sensing / parallel feedback Input voltage comparison / series feedback
V	I	Transadmittance	0, B, 0, 0	Output current sensing / series feedback Input voltage comparison / series feedback
I				

Negative Feedback Amplifier Configurations

Source type	Load type	Amplifier type	A, B, C, D	Feedback configuration
V	V	Voltage amplifier	A, 0, 0, 0	Output voltage sensing / parallel feedback Input voltage comparison / series feedback
V	I	Transadmittance	0, B, 0, 0	Output current sensing / series feedback Input voltage comparison / series feedback
I	V			

Negative Feedback Amplifier Configurations

Source type	Load type	Amplifier type	A, B, C, D	Feedback configuration
V	V	Voltage amplifier	A, 0, 0, 0	Output voltage sensing / parallel feedback Input voltage comparison / series feedback
V	I	Transadmittance	0, B, 0, 0	Output current sensing / series feedback Input voltage comparison / series feedback
I	V	Transimpedance		

Negative Feedback Amplifier Configurations

Source type	Load type	Amplifier type	A, B, C, D	Feedback configuration
V	V	Voltage amplifier	A, 0, 0, 0	Output voltage sensing / parallel feedback Input voltage comparison / series feedback
V	I	Transadmittance	0, B, 0, 0	Output current sensing / series feedback Input voltage comparison / series feedback
I	V	Transimpedance	0, 0, C, 0	

Negative Feedback Amplifier Configurations

Source type	Load type	Amplifier type	A, B, C, D	Feedback configuration
V	V	Voltage amplifier	A, 0, 0, 0	Output voltage sensing / parallel feedback Input voltage comparison / series feedback
V	I	Transadmittance	0, B, 0, 0	Output current sensing / series feedback Input voltage comparison / series feedback
I	V	Transimpedance	0, 0, C, 0	Output voltage sensing / parallel feedback

Negative Feedback Amplifier Configurations

Source type	Load type	Amplifier type	A, B, C, D	Feedback configuration
V	V	Voltage amplifier	A, 0, 0, 0	Output voltage sensing / parallel feedback Input voltage comparison / series feedback
V	I	Transadmittance	0, B, 0, 0	Output current sensing / series feedback Input voltage comparison / series feedback
I	V	Transimpedance	0, 0, C, 0	Output voltage sensing / parallel feedback Input current comparison / parallel feedback

Negative Feedback Transimpedance Configurations

Negative Feedback Transimpedance Configurations

Nonenergic feedback amplifier

Negative Feedback Transimpedance Configurations

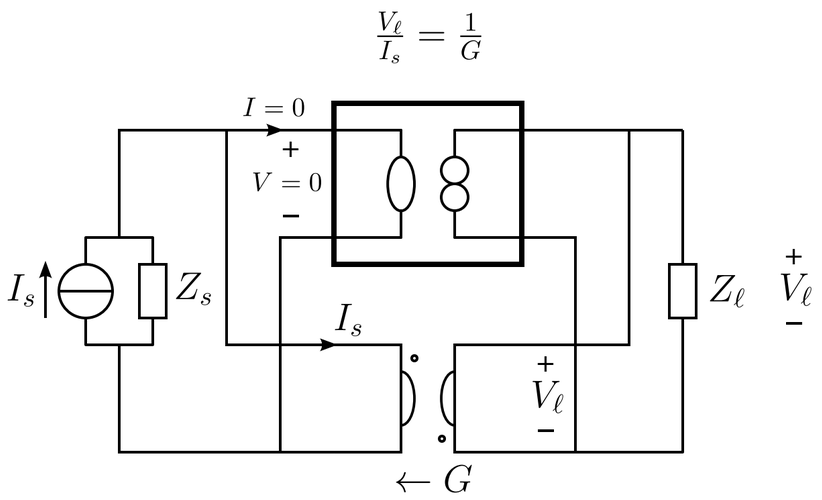

Nonenergic feedback amplifier

Negative Feedback Transimpedance Configurations

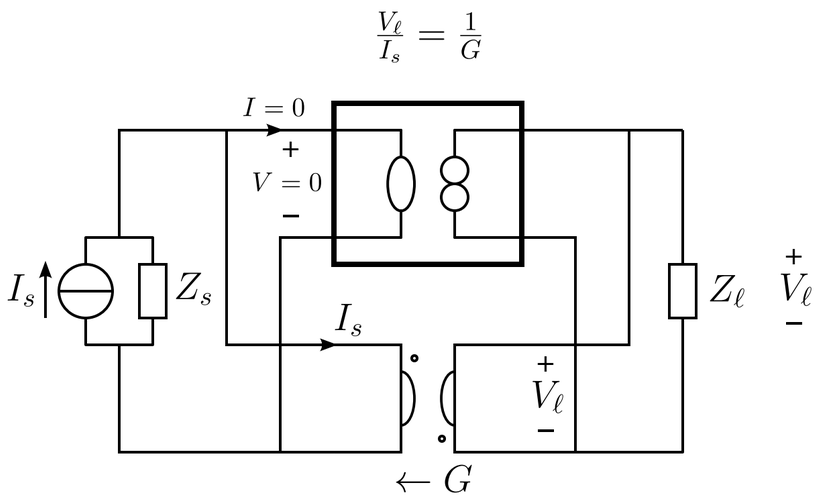

Nonenergic feedback amplifier

- port isolation

Negative Feedback Transimpedance Configurations

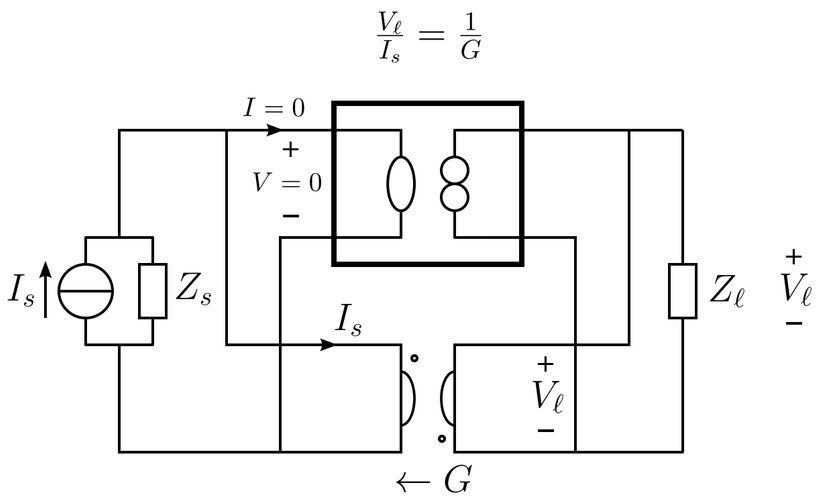

Nonenergic feedback amplifier

- port isolation
- inverting or noninverting

Negative Feedback Transimpedance Configurations

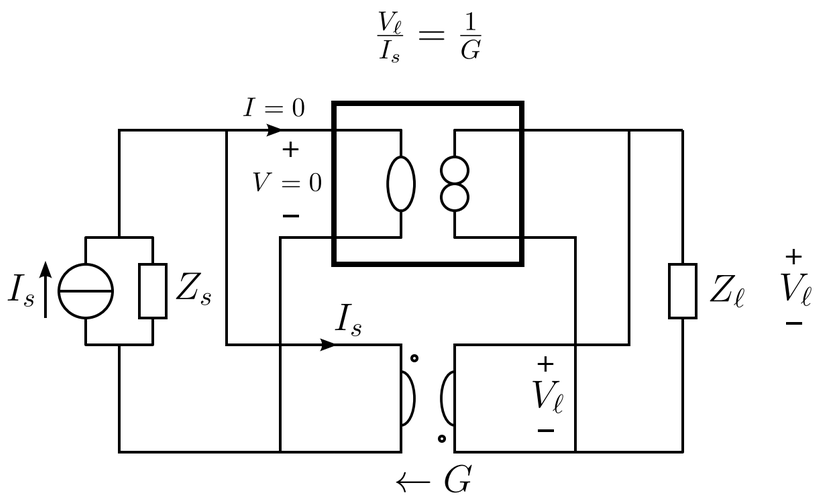

Nonenergic feedback amplifier

- port isolation
- inverting or noninverting

Passive feedback amplifier

Negative Feedback Transimpedance Configurations

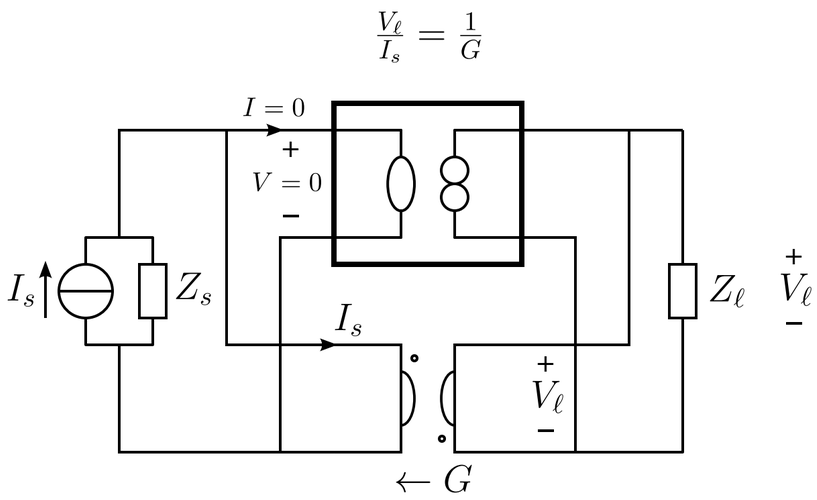

Nonenergic feedback amplifier

- port isolation
- inverting or noninverting

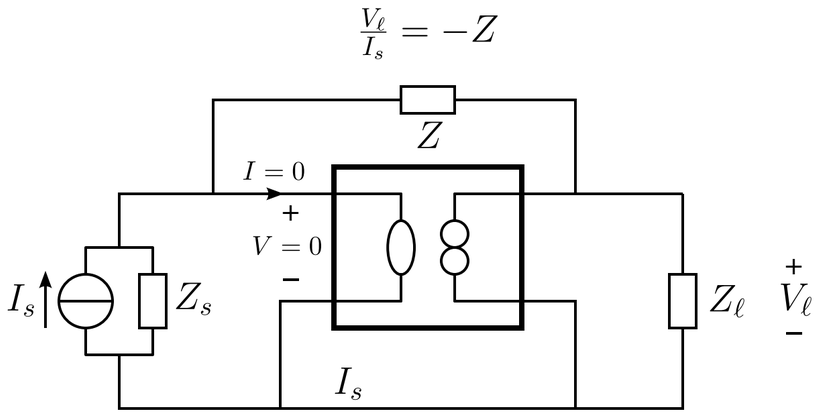

Passive feedback amplifier

Negative Feedback Transimpedance Configurations

$$\frac{V_\ell}{I_s} = \frac{1}{G}$$

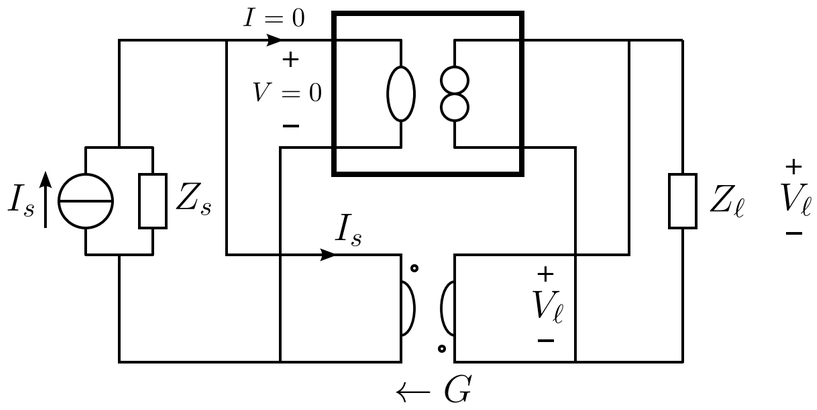

Nonenergic feedback amplifier

- port isolation
- inverting or noninverting

$$\frac{V_\ell}{I_s} = -Z$$

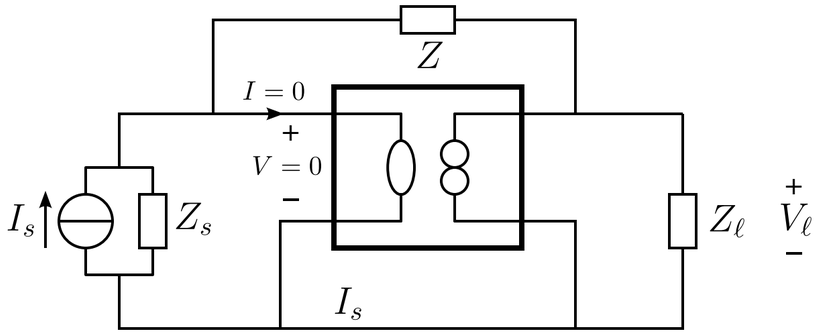

Passive feedback amplifier

- no port isolation

Negative Feedback Transimpedance Configurations

$$\frac{V_\ell}{I_s} = \frac{1}{G}$$

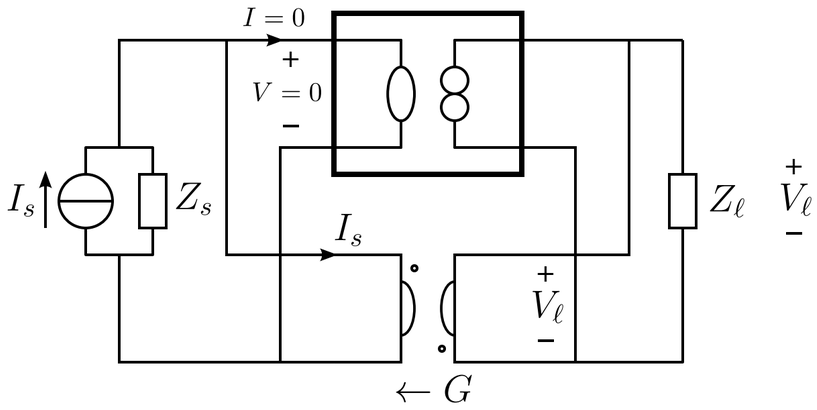

Nonenergic feedback amplifier

- port isolation
- inverting or noninverting

$$\frac{V_\ell}{I_s} = -Z$$

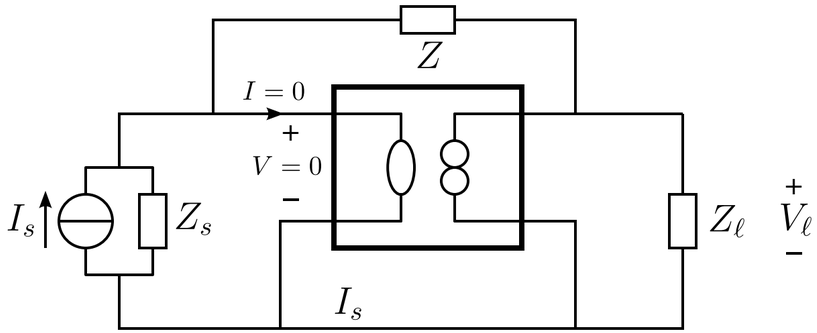

Passive feedback amplifier

- no port isolation
- inverting

Negative Feedback Transimpedance Configurations

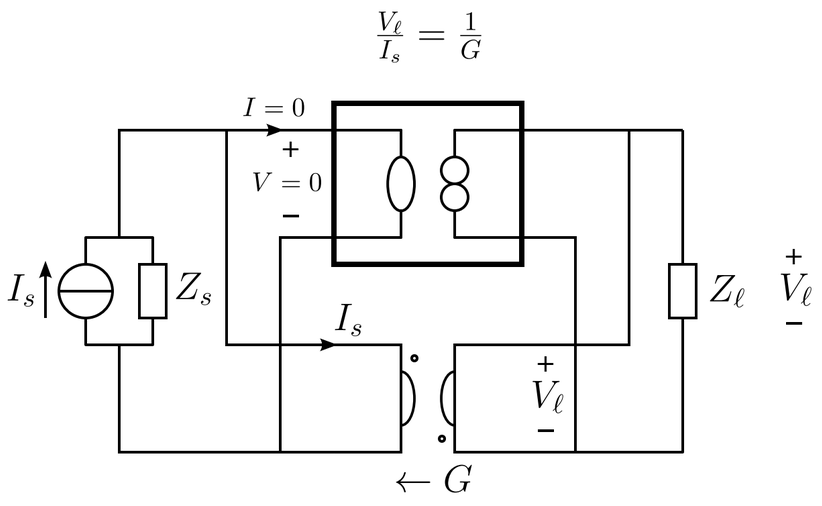

Nonenergic feedback amplifier

- port isolation
- inverting or noninverting

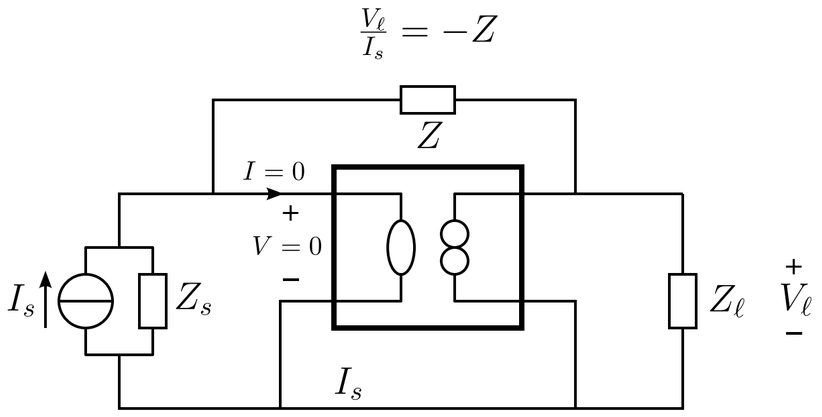

Passive feedback amplifier

- no port isolation
- inverting

Negative Feedback Amplifier Configurations

Source type	Load type	Amplifier type	A, B, C, D	Feedback configuration
V	V	Voltage amplifier	A, 0, 0, 0	Output voltage sensing / parallel feedback Input voltage comparison / series feedback
V	I	Transadmittance	0, B, 0, 0	Output current sensing / series feedback Input voltage comparison / series feedback
I	V	Transimpedance	0, 0, C, 0	Output voltage sensing / parallel feedback Input current comparison / parallel feedback
I				

Negative Feedback Amplifier Configurations

Source type	Load type	Amplifier type	A, B, C, D	Feedback configuration
V	V	Voltage amplifier	A, 0, 0, 0	Output voltage sensing / parallel feedback Input voltage comparison / series feedback
V	I	Transadmittance	0, B, 0, 0	Output current sensing / series feedback Input voltage comparison / series feedback
I	V	Transimpedance	0, 0, C, 0	Output voltage sensing / parallel feedback Input current comparison / parallel feedback
I	I			

Negative Feedback Amplifier Configurations

Source type	Load type	Amplifier type	A, B, C, D	Feedback configuration
V	V	Voltage amplifier	A, 0, 0, 0	Output voltage sensing / parallel feedback Input voltage comparison / series feedback
V	I	Transadmittance	0, B, 0, 0	Output current sensing / series feedback Input voltage comparison / series feedback
I	V	Transimpedance	0, 0, C, 0	Output voltage sensing / parallel feedback Input current comparison / parallel feedback
I	I	Current amplifier		

Negative Feedback Amplifier Configurations

Source type	Load type	Amplifier type	A, B, C, D	Feedback configuration
V	V	Voltage amplifier	A, 0, 0, 0	Output voltage sensing / parallel feedback Input voltage comparison / series feedback
V	I	Transadmittance	0, B, 0, 0	Output current sensing / series feedback Input voltage comparison / series feedback
I	V	Transimpedance	0, 0, C, 0	Output voltage sensing / parallel feedback Input current comparison / parallel feedback
I	I	Current amplifier	0, 0, 0, D	

Negative Feedback Amplifier Configurations

Source type	Load type	Amplifier type	A, B, C, D	Feedback configuration
V	V	Voltage amplifier	A, 0, 0, 0	Output voltage sensing / parallel feedback Input voltage comparison / series feedback
V	I	Transadmittance	0, B, 0, 0	Output current sensing / series feedback Input voltage comparison / series feedback
I	V	Transimpedance	0, 0, C, 0	Output voltage sensing / parallel feedback Input current comparison / parallel feedback
I	I	Current amplifier	0, 0, 0, D	Output current sensing / series feedback

Negative Feedback Amplifier Configurations

Source type	Load type	Amplifier type	A, B, C, D	Feedback configuration
V	V	Voltage amplifier	A, 0, 0, 0	Output voltage sensing / parallel feedback Input voltage comparison / series feedback
V	I	Transadmittance	0, B, 0, 0	Output current sensing / series feedback Input voltage comparison / series feedback
I	V	Transimpedance	0, 0, C, 0	Output voltage sensing / parallel feedback Input current comparison / parallel feedback
I	I	Current amplifier	0, 0, 0, D	Output current sensing / series feedback Input current comparison / parallel feedback

Negative Feedback Current Amplifier Configurations

Negative Feedback Current Amplifier Configurations

Nonenergic feedback amplifier

Negative Feedback Current Amplifier Configurations

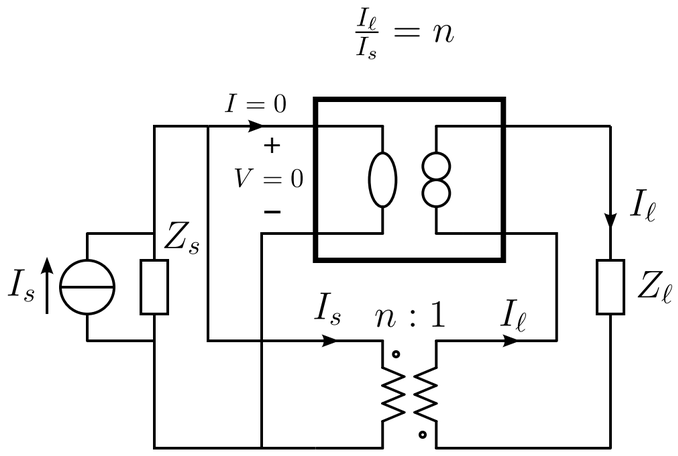

Nonenergic feedback amplifier

Negative Feedback Current Amplifier Configurations

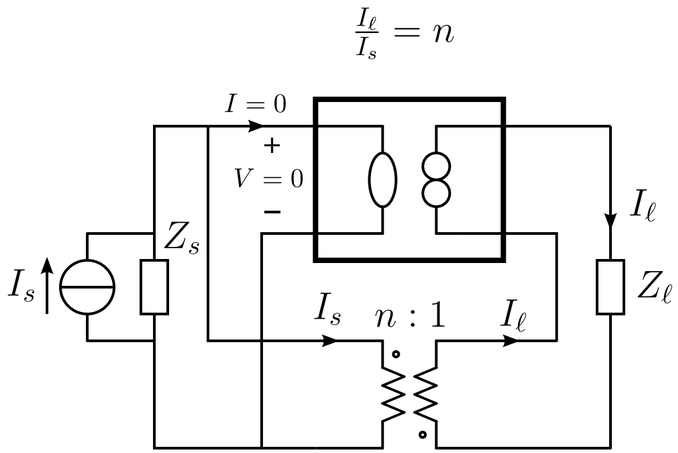

Nonenergic feedback amplifier

- port isolation

Negative Feedback Current Amplifier Configurations

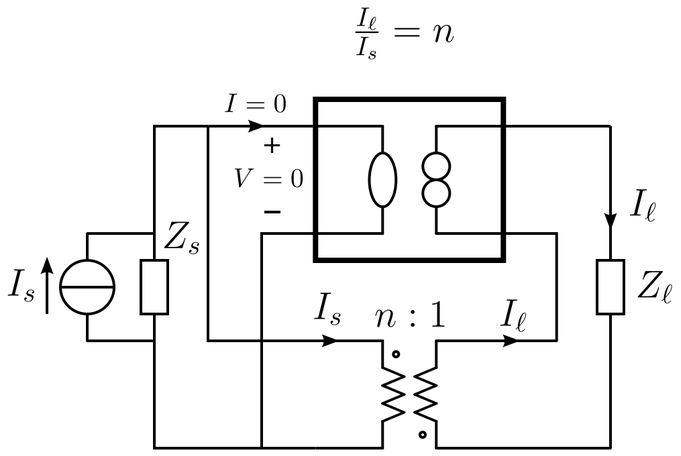

Nonenergic feedback amplifier

- port isolation
- inverting or noninverting

Negative Feedback Current Amplifier Configurations

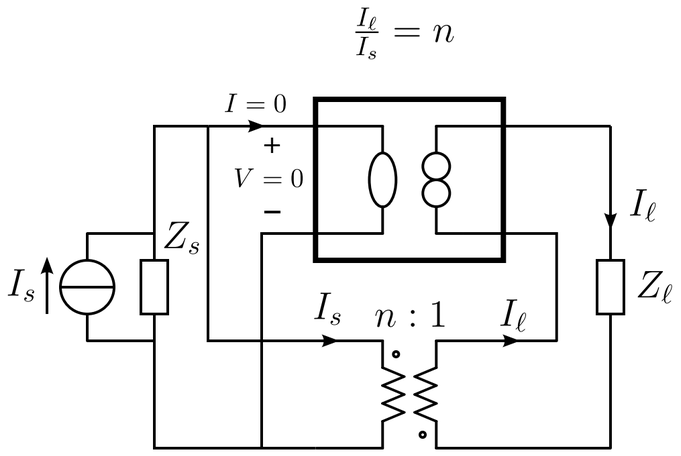

Nonenergic feedback amplifier

- port isolation
- inverting or noninverting
- gain less, equal or larger than unity

Negative Feedback Current Amplifier Configurations

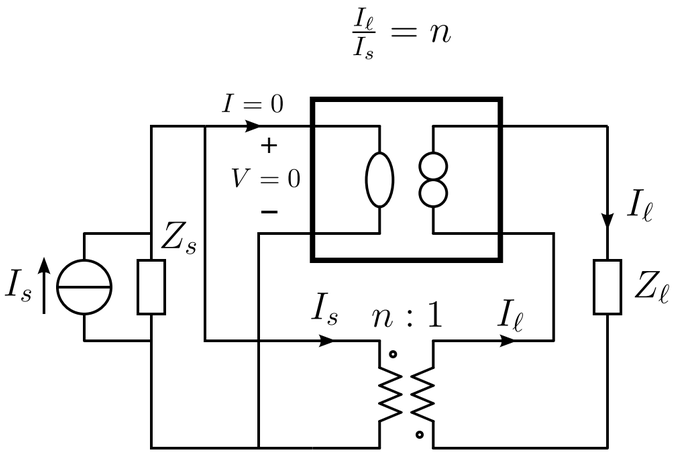

Nonenergic feedback amplifier

- port isolation
- inverting or noninverting
- gain less, equal or larger than unity

Nonenergic feedback follower

Negative Feedback Current Amplifier Configurations

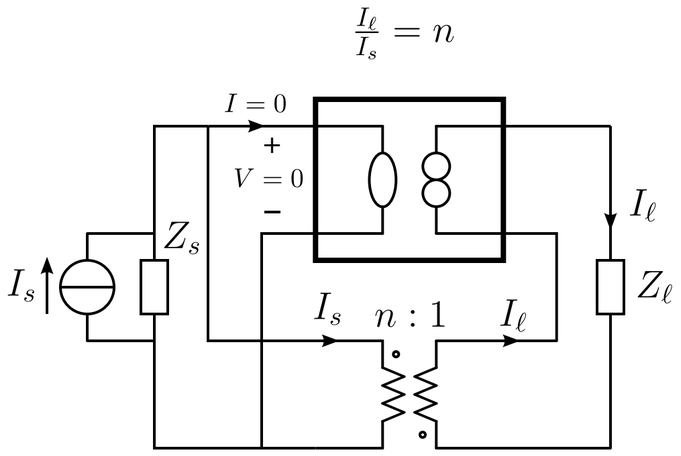

Nonenergic feedback amplifier

- port isolation
- inverting or noninverting
- gain less, equal or larger than unity

Nonenergic feedback follower

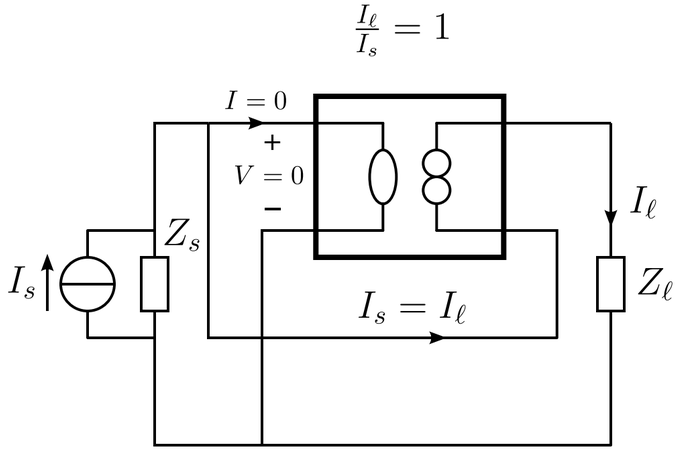

Negative Feedback Current Amplifier Configurations

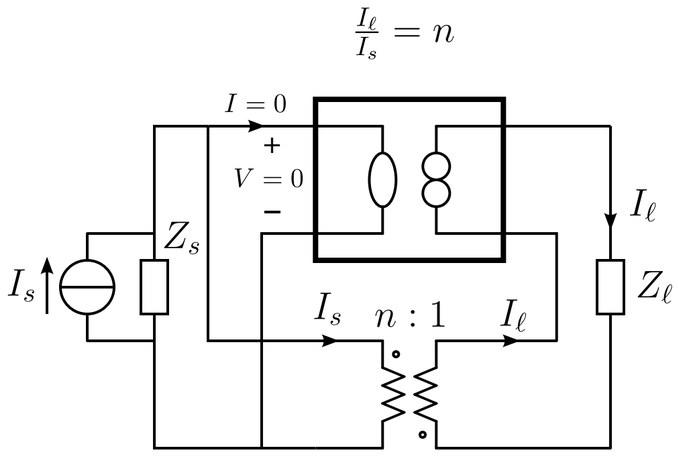

Nonenergic feedback amplifier

- port isolation
- inverting or noninverting
- gain less, equal or larger than unity

Nonenergic feedback follower

- no port isolation

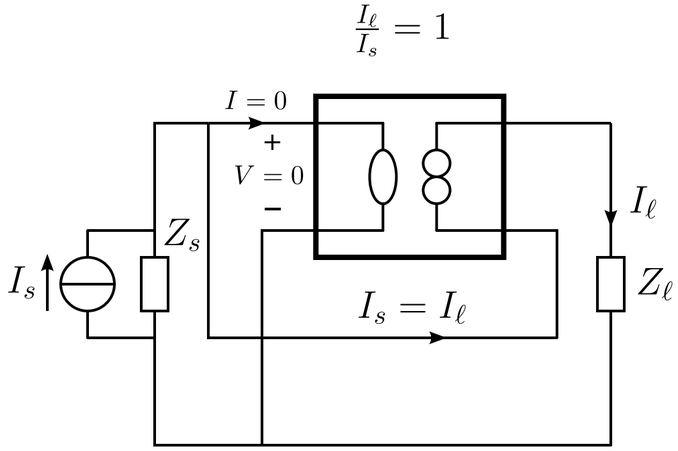

Negative Feedback Current Amplifier Configurations

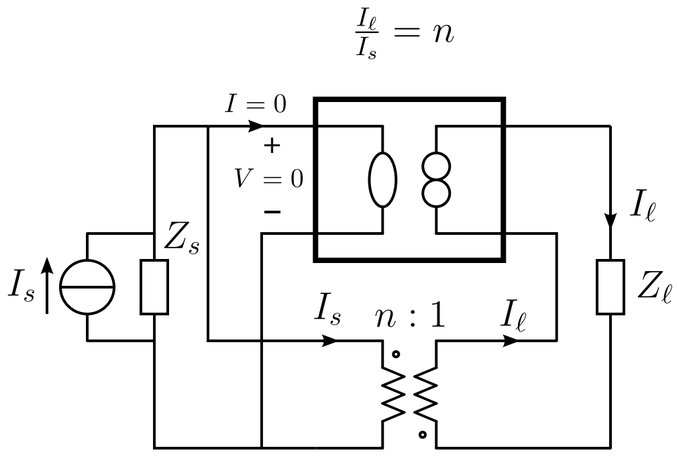

Nonenergic feedback amplifier

- port isolation
- inverting or noninverting
- gain less, equal or larger than unity

Nonenergic feedback follower

- no port isolation
- noninverting

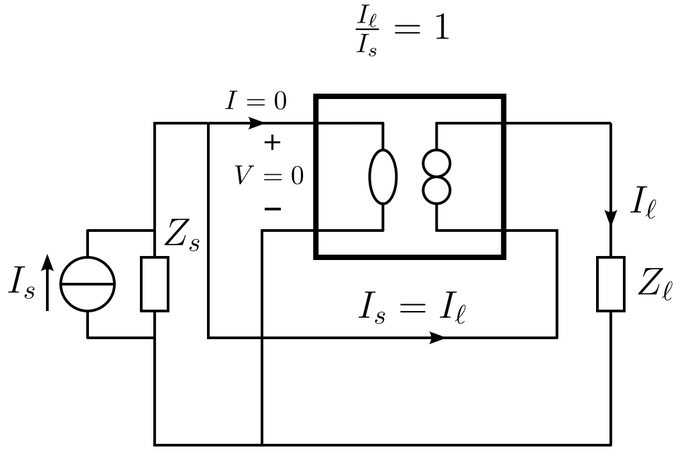

Negative Feedback Current Amplifier Configurations

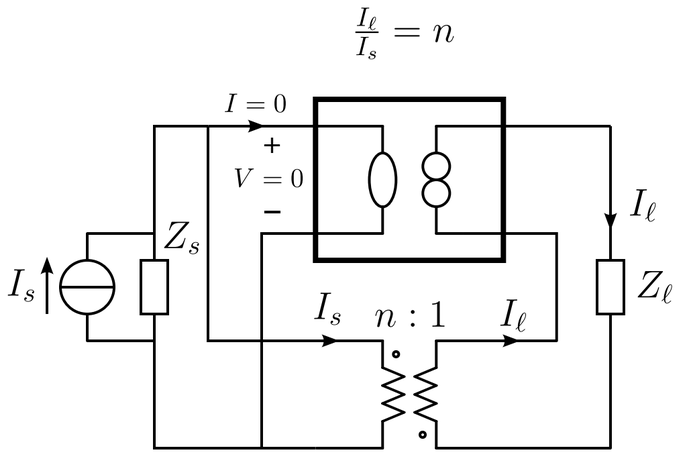

Nonenergic feedback amplifier

- port isolation
- inverting or noninverting
- gain less, equal or larger than unity

Nonenergic feedback follower

- no port isolation
- noninverting
- gain equals unity

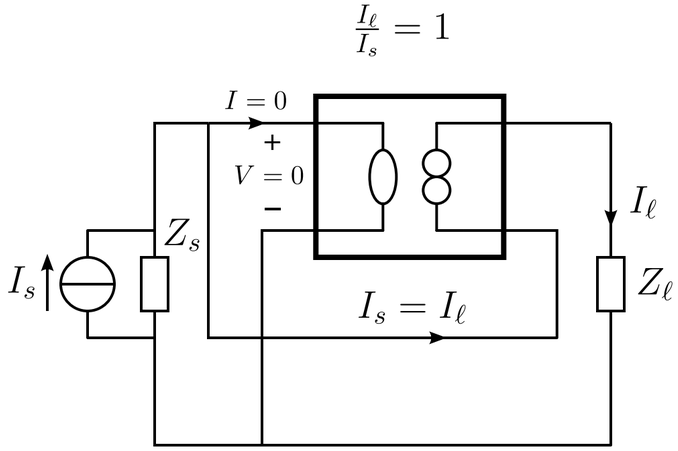

Negative Feedback Current Amplifier Configurations

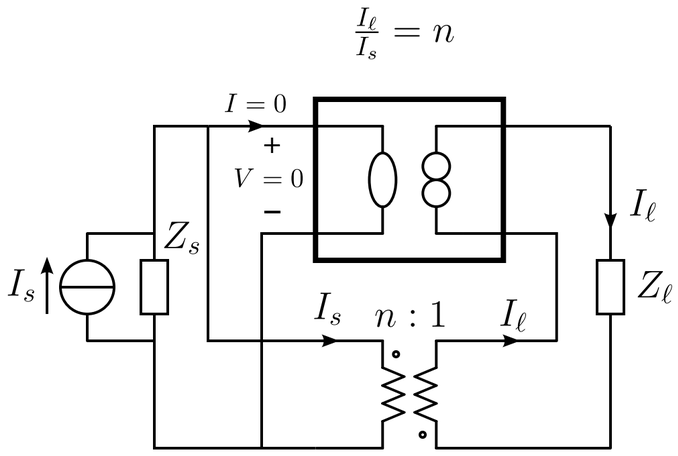

Nonenergic feedback amplifier

- port isolation
- inverting or noninverting
- gain less, equal or larger than unity

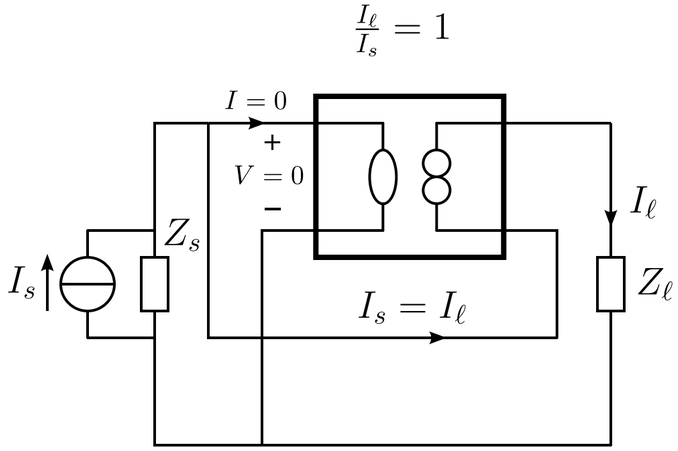

Nonenergic feedback follower

- no port isolation
- noninverting
- gain equals unity

Passive feedback amplifier

Negative Feedback Current Amplifier Configurations

$\frac{I_\ell}{I_s} = n$

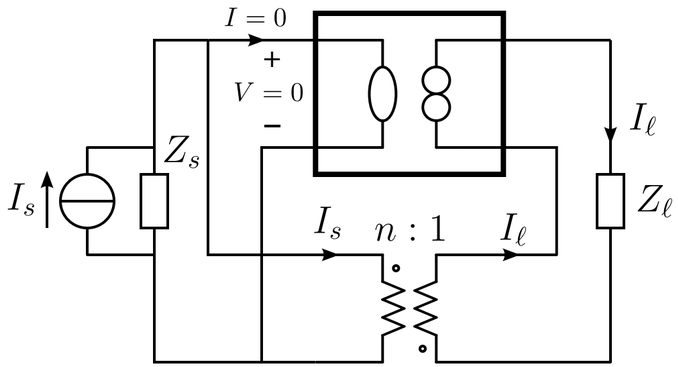

Nonenergic feedback amplifier

- port isolation
- inverting or noninverting
- gain less, equal or larger than unity

$\frac{I_\ell}{I_s} = 1$

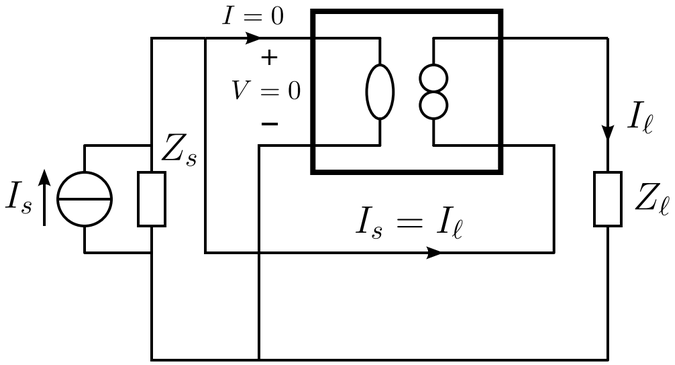

Nonenergic feedback follower

- no port isolation
- noninverting
- gain equals unity

$\frac{I_\ell}{I_s} = \frac{Z_1+Z_2}{Z_2}$

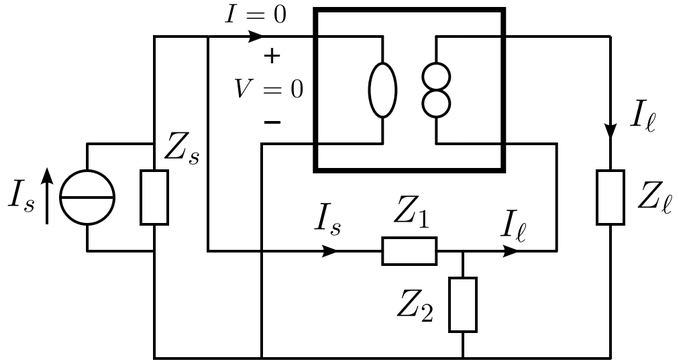

Passive feedback amplifier

Negative Feedback Current Amplifier Configurations

$\frac{I_\ell}{I_s} = n$

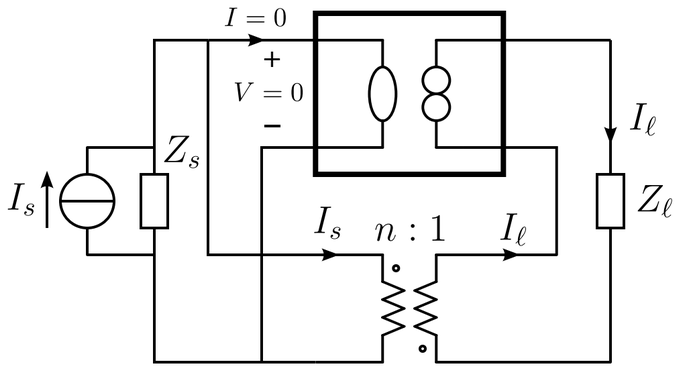

Nonenergic feedback amplifier

- port isolation
- inverting or noninverting
- gain less, equal or larger than unity

$\frac{I_\ell}{I_s} = \frac{Z_1+Z_2}{Z_2}$

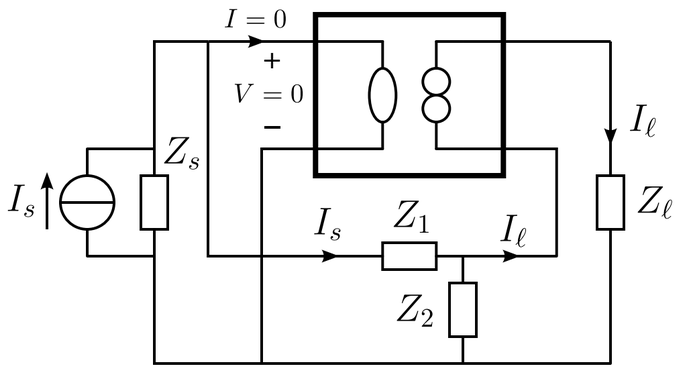

Nonenergic feedback follower

- no port isolation
- noninverting
- gain equals unity

$\frac{I_\ell}{I_s} = 1$

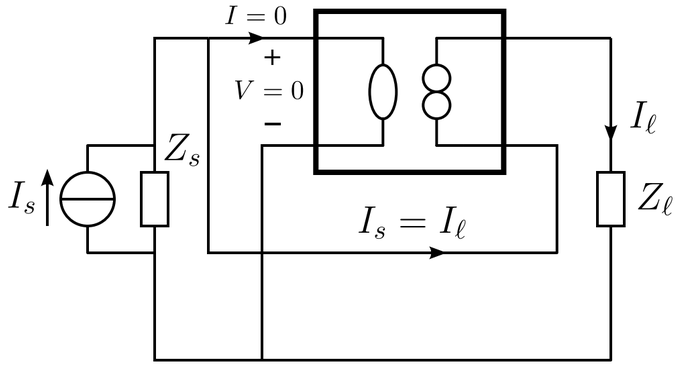

Passive feedback amplifier

- no port isolation

Negative Feedback Current Amplifier Configurations

$\frac{I_\ell}{I_s} = n$

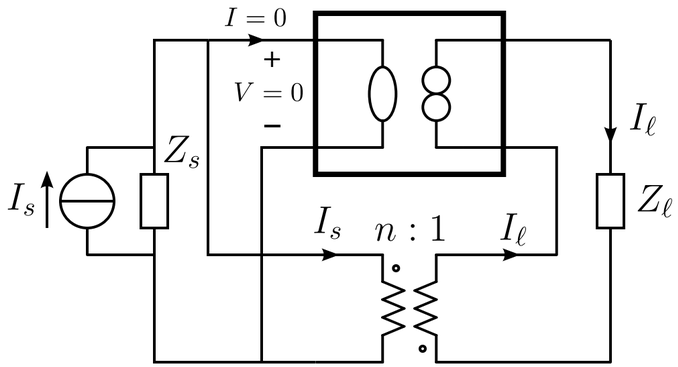

Nonenergic feedback amplifier

- port isolation
- inverting or noninverting
- gain less, equal or larger than unity

$\frac{I_\ell}{I_s} = 1$

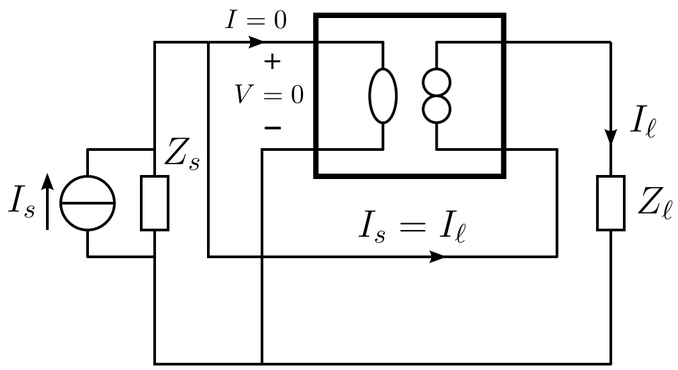

Nonenergic feedback follower

- no port isolation
- noninverting
- gain equals unity

$\frac{I_\ell}{I_s} = \frac{Z_1+Z_2}{Z_2}$

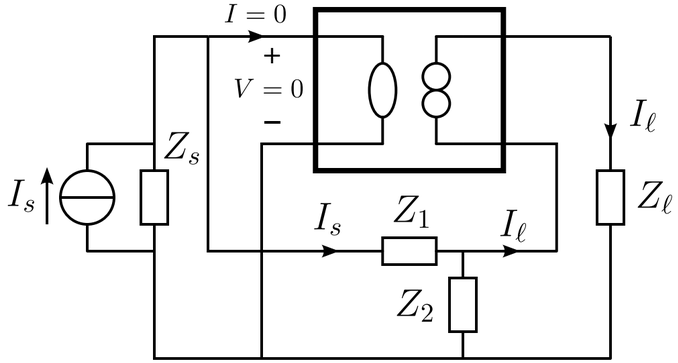

Passive feedback amplifier

- no port isolation
- noninverting

Negative Feedback Current Amplifier Configurations

$\frac{I_\ell}{I_s} = n$

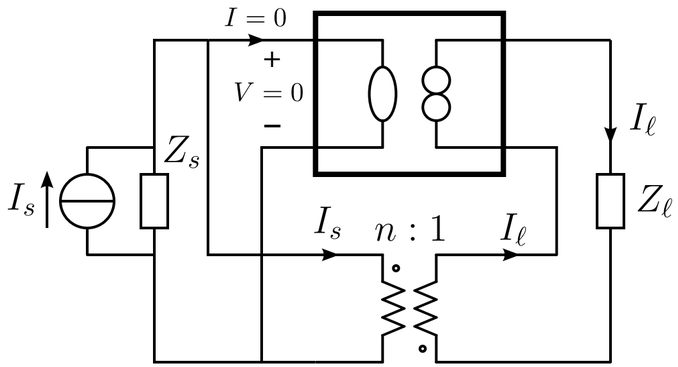

Nonenergic feedback amplifier

- port isolation
- inverting or noninverting
- gain less, equal or larger than unity

$\frac{I_\ell}{I_s} = 1$

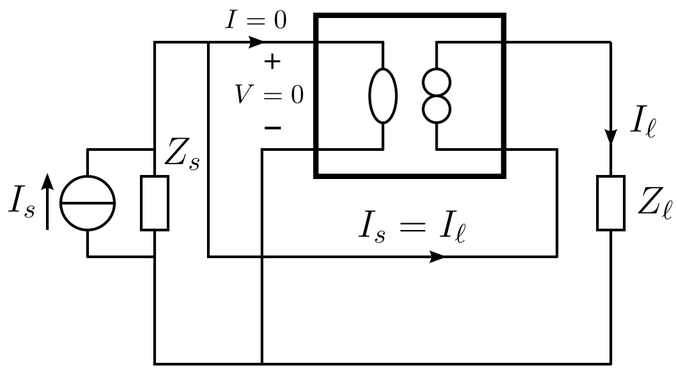

Nonenergic feedback follower

- no port isolation
- noninverting
- gain equals unity

$\frac{I_\ell}{I_s} = \frac{Z_1+Z_2}{Z_2}$

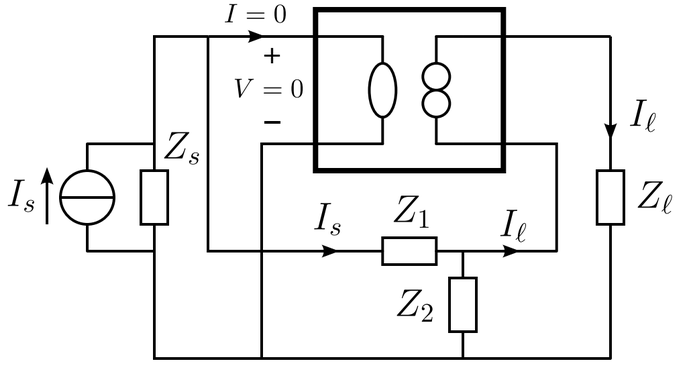

Passive feedback amplifier

- no port isolation
- noninverting
- gain larger than unity

Negative Feedback Current Amplifier Configurations

$\frac{I_\ell}{I_s} = n$

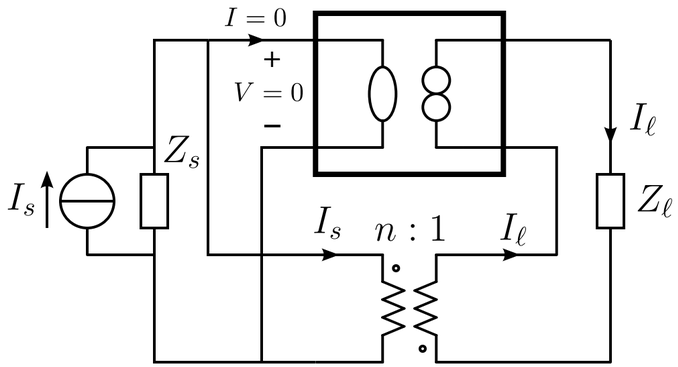

Nonenergic feedback amplifier

- port isolation
- inverting or noninverting
- gain less, equal or larger than unity

$\frac{I_\ell}{I_s} = 1$

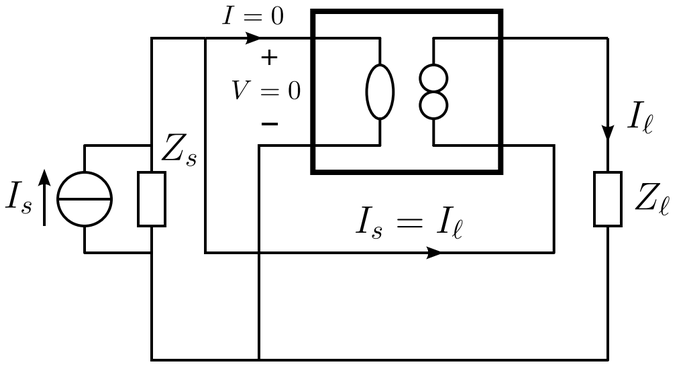

Nonenergic feedback follower

- no port isolation
- noninverting
- gain equals unity

$\frac{I_\ell}{I_s} = \frac{Z_1+Z_2}{Z_2}$

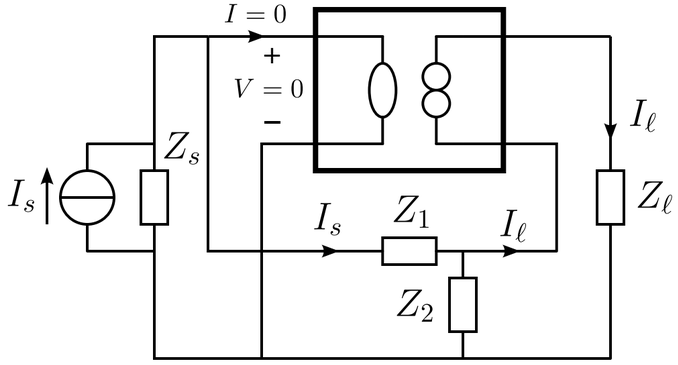

Passive feedback amplifier

- no port isolation
- noninverting
- gain larger than unity

Negative Feedback Amplifier Configurations

Source type	Load type	Amplifier type	A, B, C, D	Feedback configuration
V	V	Voltage amplifier	A, 0, 0, 0	Output voltage sensing / parallel feedback Input voltage comparison / series feedback
V	I	Transadmittance	0, B, 0, 0	Output current sensing / series feedback Input voltage comparison / series feedback
I	V	Transimpedance	0, 0, C, 0	Output voltage sensing / parallel feedback Input current comparison / parallel feedback
I	I	Current amplifier	0, 0, 0, D	Output current sensing / series feedback Input current comparison / parallel feedback