Structured Electronic Design

Design of Single-loop Negative Feedback Amplifier Configurations

Anton J.M. Montagne

(c) 2021 A.J.M. Montagne

Negative Feedback Amplifier Configurations

Source type	Load type	Amplifier type	A, B, C, D	Feedback configuration
V	V	Voltage amplifier	A, 0, 0, 0	Output voltage sensing / parallel feedback Input voltage comparison / series feedback
V	I	Transadmittance	0, B, 0, 0	Output current sensing / series feedback Input voltage comparison / series feedback
I	V	Transimpedance	0, 0, C, 0	Output voltage sensing / parallel feedback Input current comparison / parallel feedback
I	I	Current amplifier	0, 0, 0, D	Output current sensing / series feedback Input current comparison / parallel feedback

(c) 2021 A.J.M. Montagne

Negative Feedback Voltage Amplifier Configurations

$\frac{V_\ell}{V_s} = n$

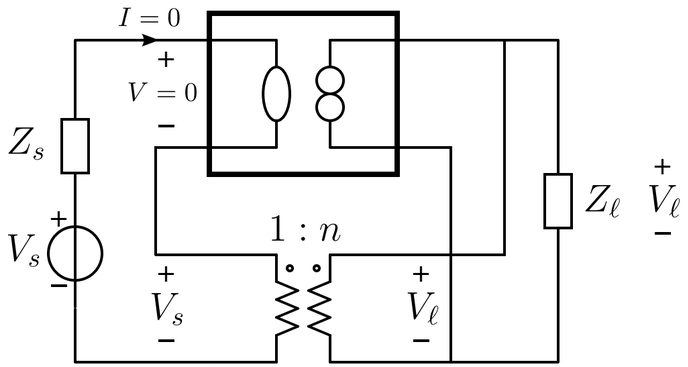

Nonenergic feedback amplifier

- port isolation
- inverting or noninverting
- gain less, equal or larger than unity

$\frac{V_\ell}{V_s} = 1$

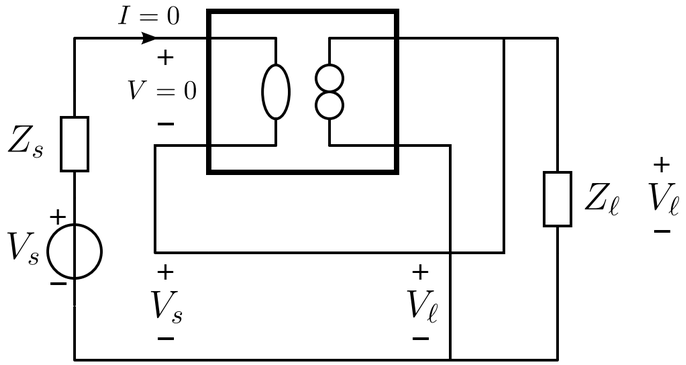

Nonenergic feedback follower

- no port isolation
- noninverting
- gain equals unity

$\frac{V_\ell}{V_s} = \frac{Z_1+Z_2}{Z_2}$

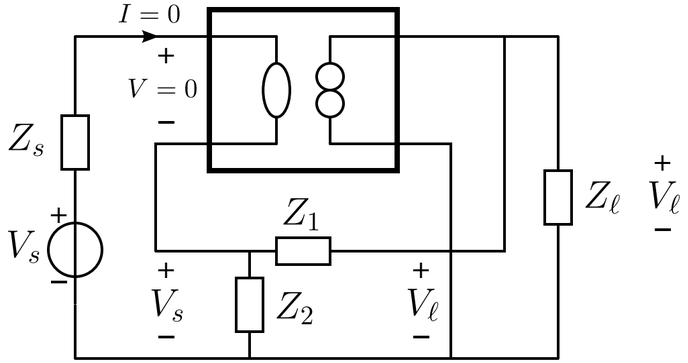

Passive feedback amplifier

- no port isolation
- noninverting
- gain larger than unity

(c) 2021 A.J.M. Montagne

Negative Feedback Transadmittance Configurations

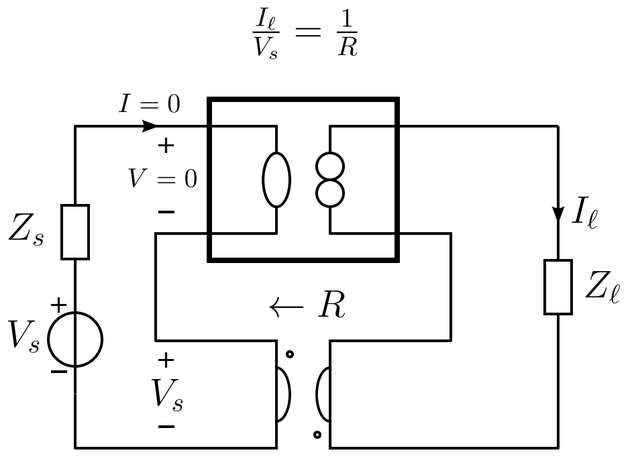

Nonenergic feedback amplifier

- port isolation
- inverting or noninverting

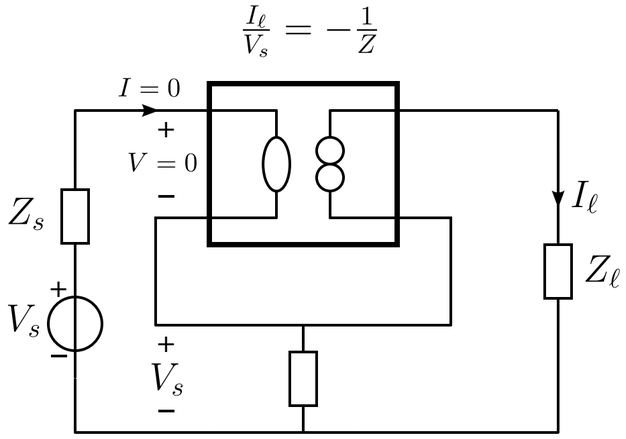

Passive feedback amplifier

- no port isolation
- inverting

Negative Feedback Transimpedance Configurations

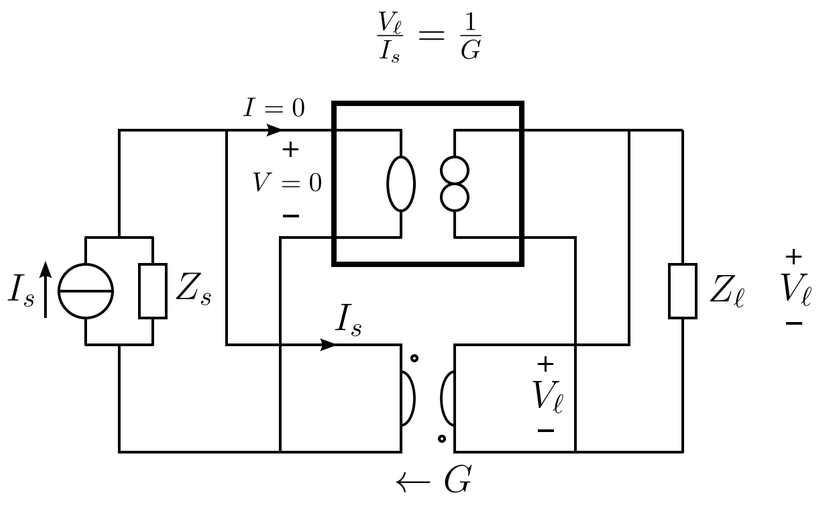

Nonenergic feedback amplifier

- port isolation
- inverting or noninverting

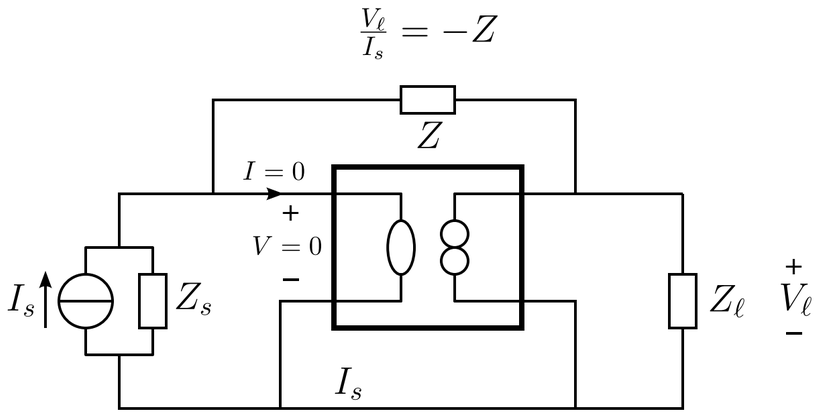

Passive feedback amplifier

- no port isolation
- inverting

Negative Feedback Current Amplifier Configurations

$\frac{I_\ell}{I_s} = n$

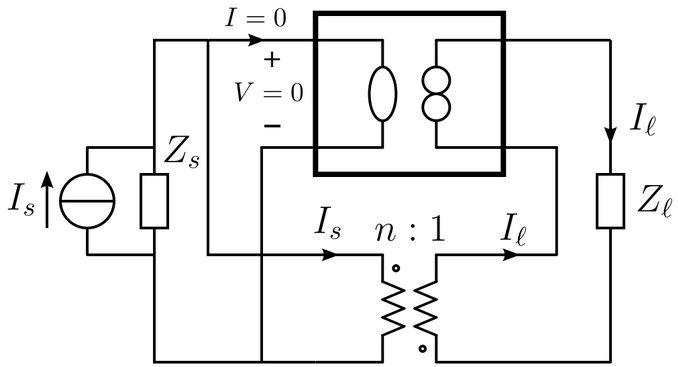

Nonenergic feedback amplifier

- port isolation
- inverting or noninverting
- gain less, equal or larger than unity

$\frac{I_\ell}{I_s} = 1$

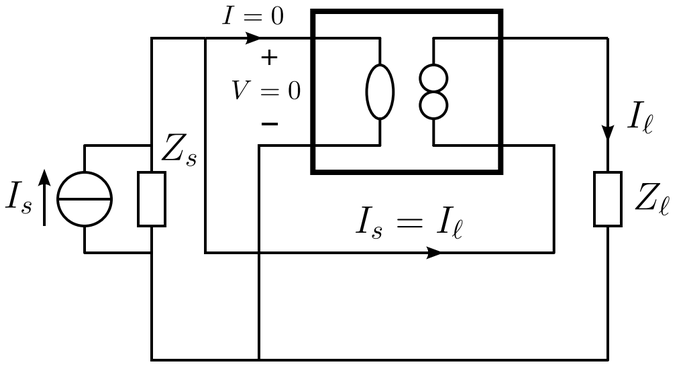

Nonenergic feedback follower

- no port isolation
- noninverting
- gain equals unity

$\frac{I_\ell}{I_s} = \frac{Z_1+Z_2}{Z_2}$

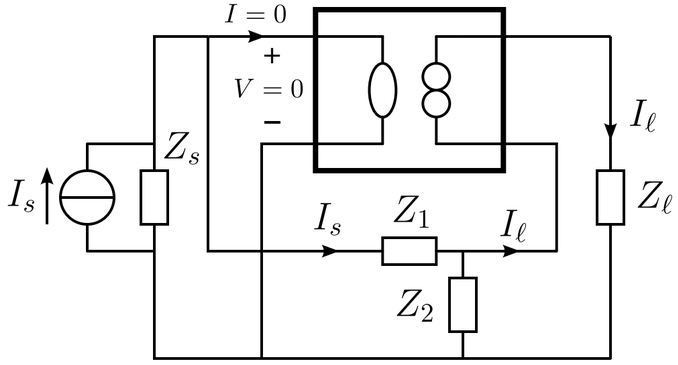

Passive feedback amplifier

- no port isolation
- noninverting
- gain larger than unity

(c) 2021 A.J.M. Montagne