Structured Electronic Design

Amplifier Biasing Example

Anton J.M. Montagne

Biasing Example

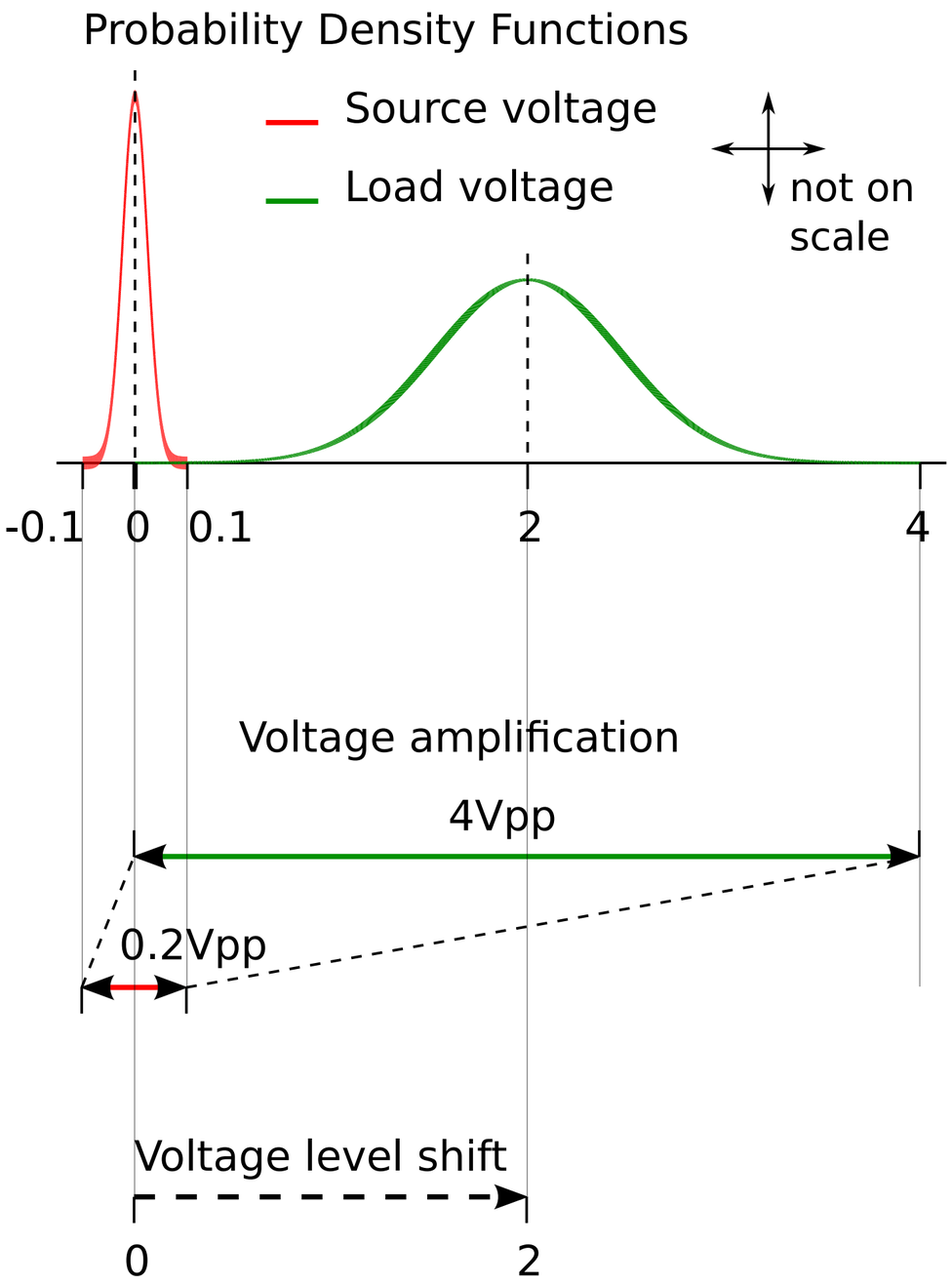

Amplifier to be designed:

- Adapts output voltage range of the microphone to input voltage range of the ADC
- Power supply voltages to be designed

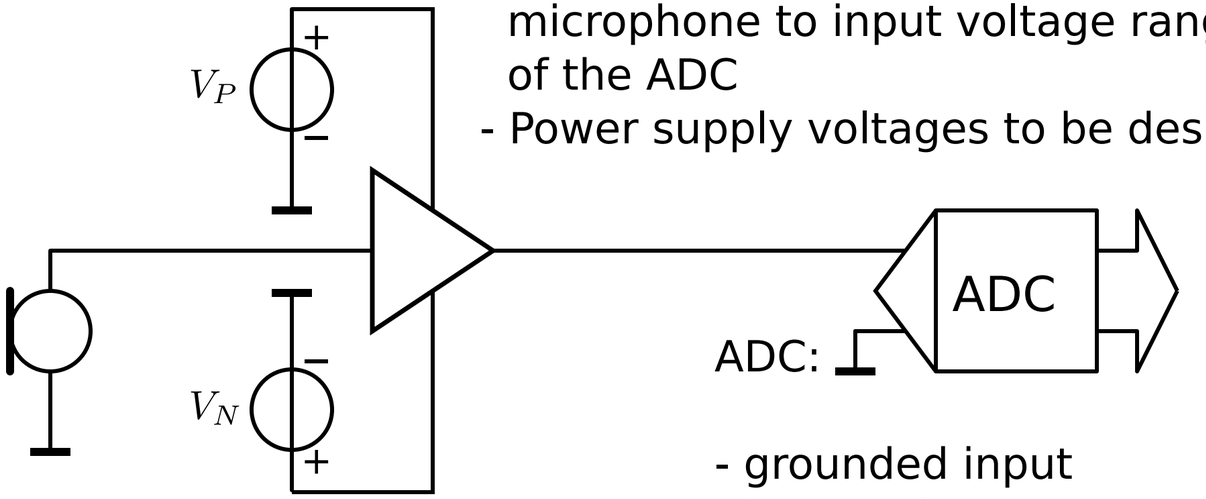

- grounded input
- input voltage range 0...4V

Microphone:

- one-sided connected to ground
- open-circuit output voltage is related to sound pressure
- no DC current allowed
- output voltage range -0.1V ... + 0.1V
- signal frequency components 20Hz ... 20kHz

Initial Bias

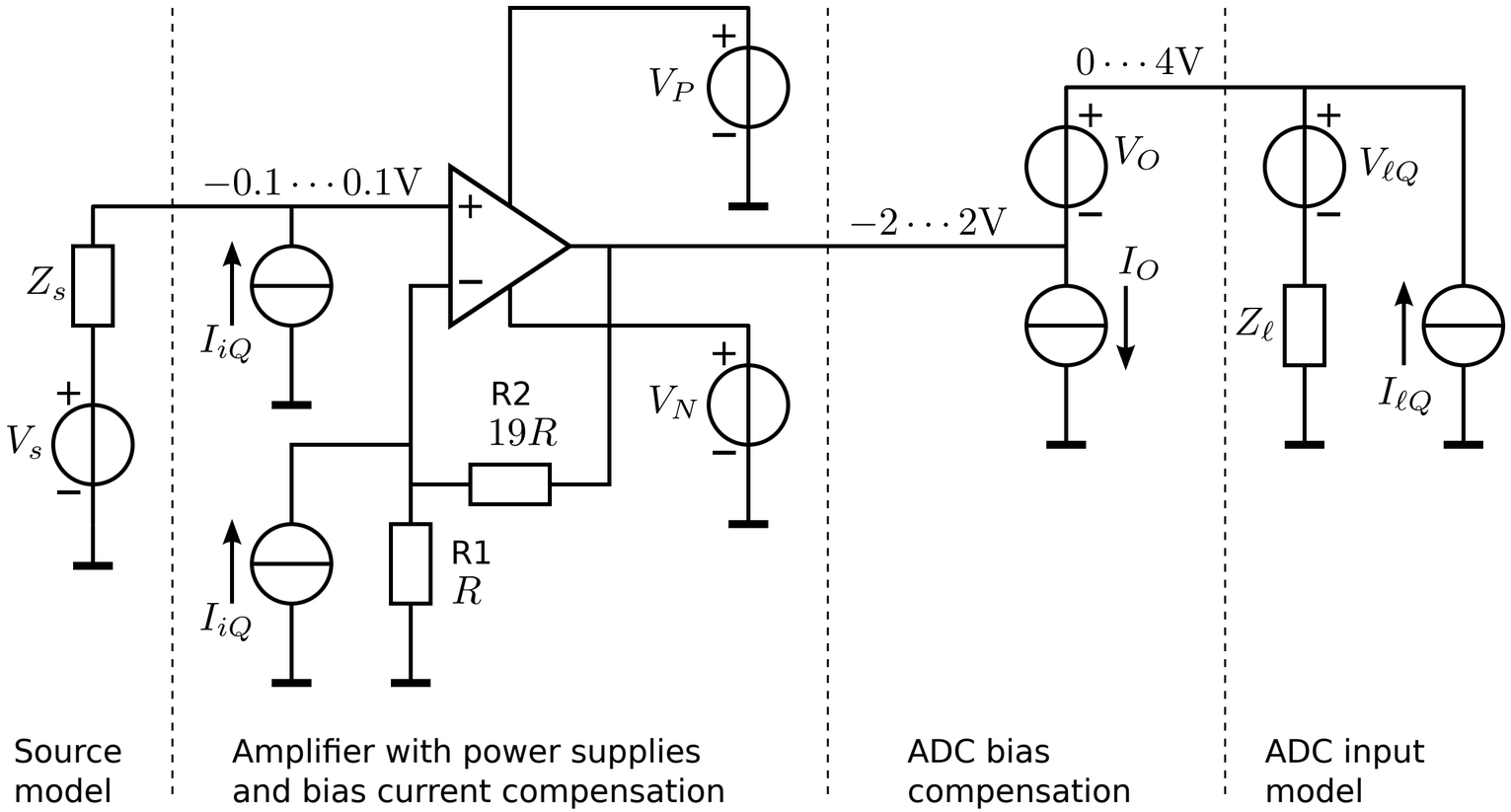

Add level shift

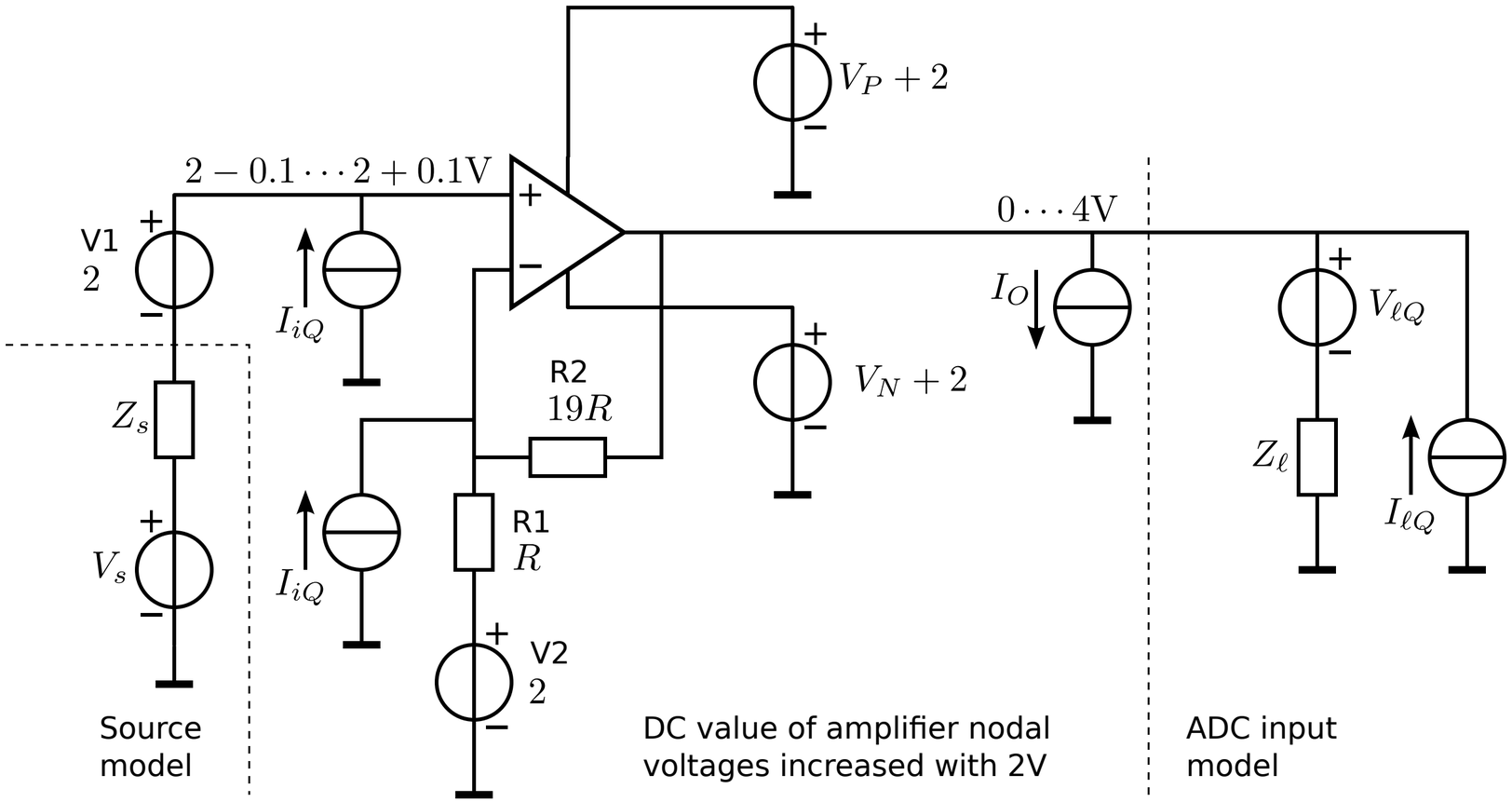

AC coupling

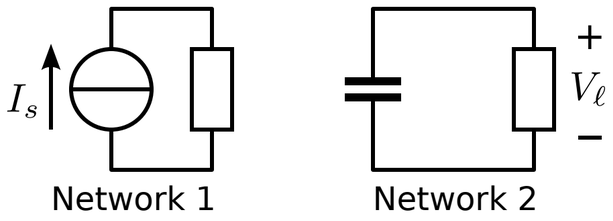

Disconnected
no coupling

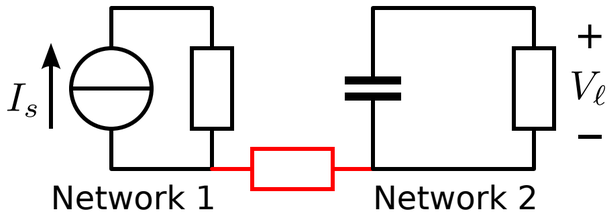

Connected
no coupling

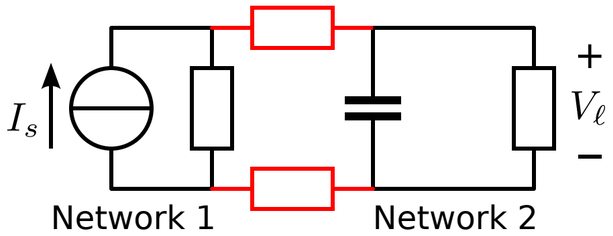

Connected
DC coupling

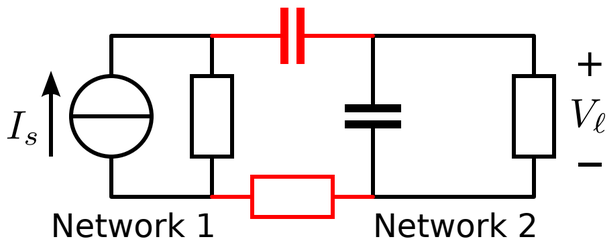

Connected
AC coupling

AC coupling:

Possible:
If signal components with very low frequencies are not of interest

Required:
If port bias voltages and/or currents are not allowed at the source or at the load

Method:
High-pass transfer

AC coupled amplifier

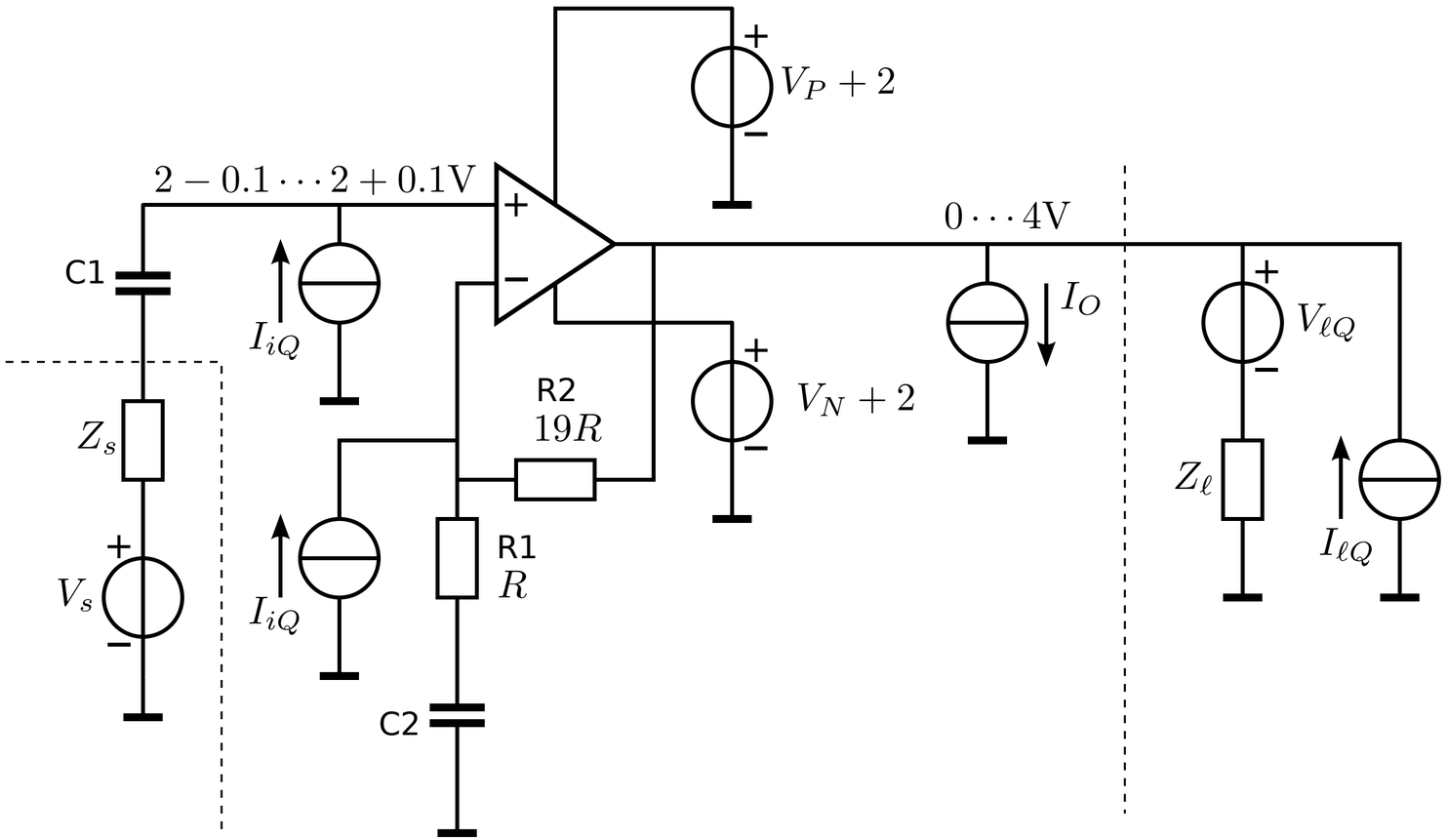

Biased amplifier

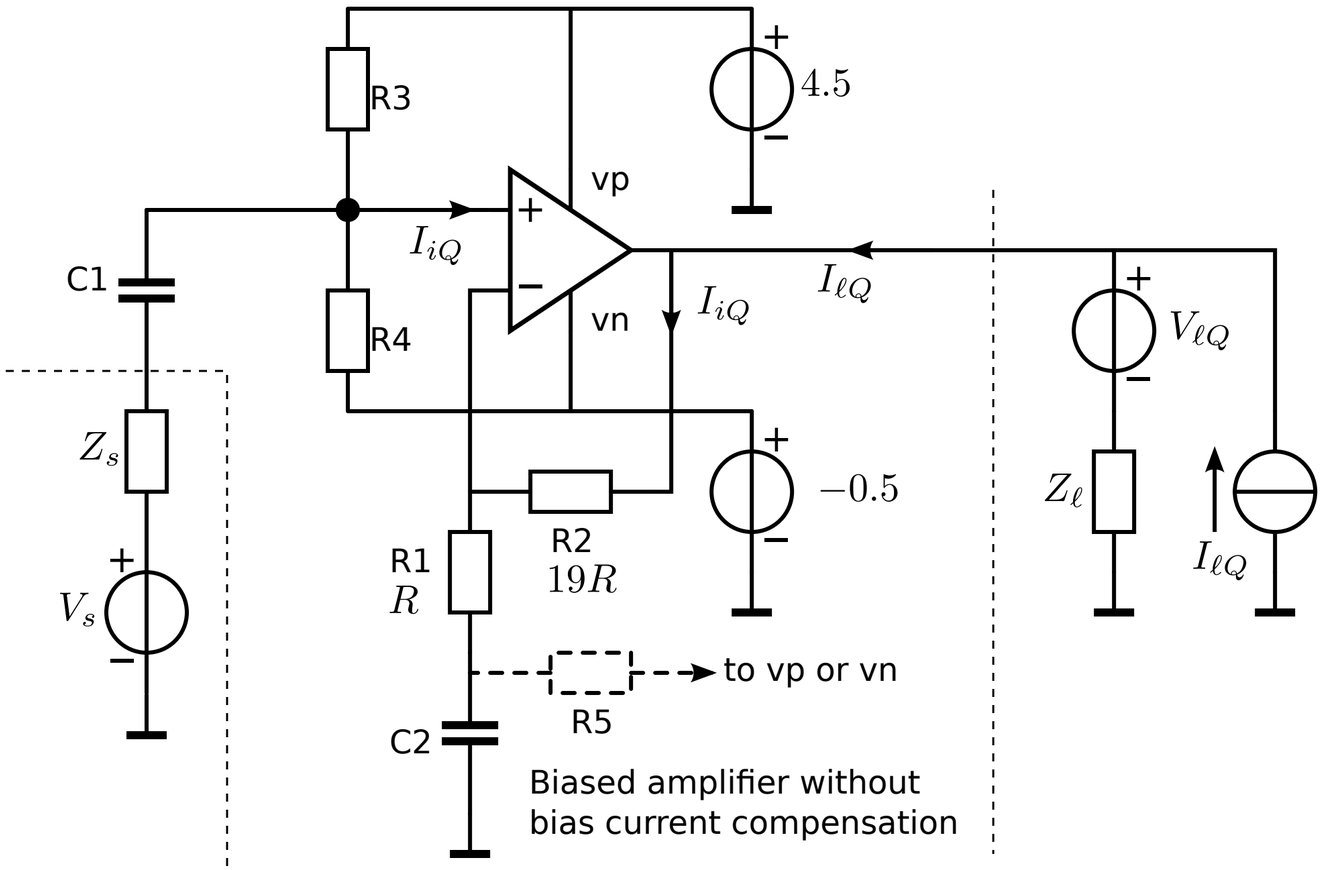

Improved biasing

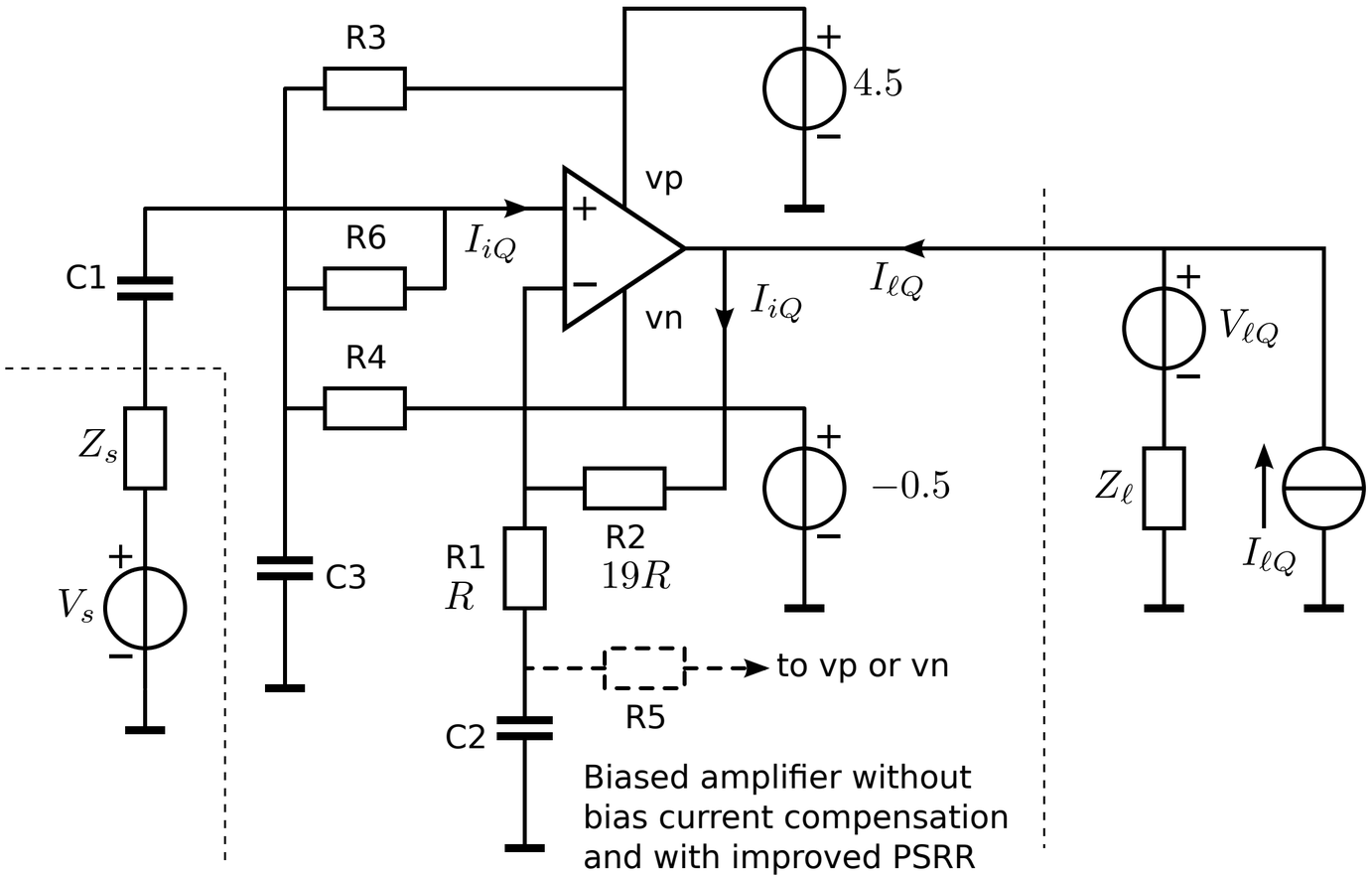

Bias design equations

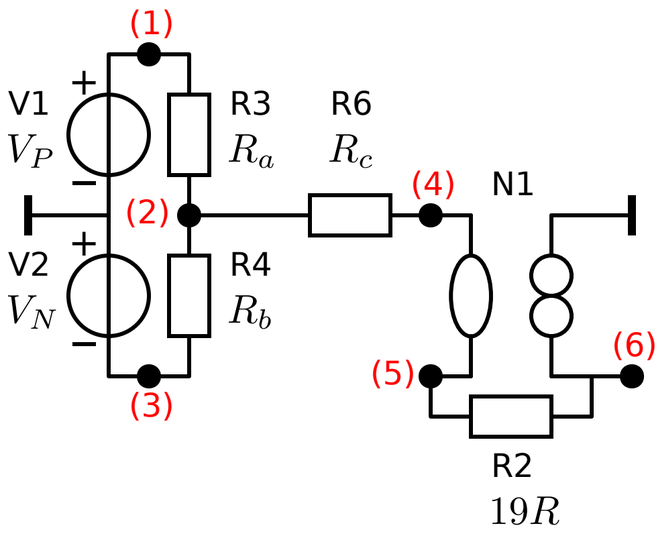

1. DC ouput voltage at node (6) should be 2V
2. Supply voltages determined by:
   - Output voltage range
   - Positive saturation voltage
   - Negative saturation voltage

$$\frac{R_b}{R_a} = \frac{V_N + V_6}{V_P - V_6}$$

